GF-136BN Single Lever Faucet
NSFC-AN136BN Combo Set

LIMITED LIFETIME WARRANTY

Novatto products have been made under the highest standards of craftsmanship and quality. All Novatto faucets are backed by Novatto's Lifetime Limited Warranty. Novatto warrants to the original consumer purchaser and their home (the "Warranty Period" for homeowners), this faucet will be free from defects in material and workmanship for one year. All other purchasers (including purchasers for industrial, commercial and business use) are excluded from this warranty.

Damage due to installation error, product abuse, product misuse, environmental issues or use of cleaners containing abrasives, alcohol or other organic solvents, whether performed by a contractor, service company, or yourself are excluded from this warranty. Novatto recommends using a plumbing professional to install your Novatto product. Except as provided by law, this warranty is in lieu of and excludes all other warranties, conditions and guarantees, whether expressed or implied, statutory or otherwise, including without restriction those of merchantability or of fitness for use.

Defects or damage caused using other than genuine Novatto parts is not covered by this warranty. This warranty is applicable only to faucets purchased after November 2009 and shall be effective from the date of purchase as shown on purchaser's receipt. If the faucet should leak or drip during normal use, Novatto will provide the purchaser the cartridge necessary to put the faucet in normal working condition. All finishes and materials on Novatto faucets are warranted to the original consumer to be free from defects in material and craftsmanship for a period of one year starting the date of purchase by the consumer. If the faucet is used commercially or is installed outside of the United States of America or Canada, the warranty is voided.

Proof of purchase (original sales receipt) must be provided to Novatto, Inc. with all warranty claims. Novatto is not responsible for labor charges, installation, loss, injury or any other incidental or consequential costs. In no event shall the liability of Novatto products surpass the purchase price of the replacement part. In no event shall Novatto be liable for *loss of profits or any such loss, or any direct or indirect, special, incidental or consequential damages howsoever incurred or designated arising out of any breached claim of warranty.

If you believe you have a warranty claim, contact Novatto, either through your local Dealer, Plumbing Contractor, Home Center, or by writing: Novatto, Inc., Attn: Product Support, 3533 E. Corona Ave., Phoenix, AZ, 85040, USA. Please be sure to provide all pertinent information regarding your claim, including a complete description of the problem, the product, model number, color, finish, the date the product was purchased and from whom the product was purchased. Also include your original invoice. For other information, or to obtain the name and address of a service or repair facility near you, email: support@novatto.com or write to the above address.

Warning: Never use cleaners containing abrasive cleansers, ammonia, bleach, acids, alcohol, solvents, waxes or other products not recommended for chrome, oil rubbed bronze, matte black, gunmetal, satin brass or brushed nickel. This will void the warranty. Novatto products may be cleaned by using a mild soap with warm water and a dry, clean soft cloth. Using anything other than what is suggested will void the warranty.

*Some states, provinces, and nations do not allow the exclusion or limitation of incidental or consequential damages, so the above limitations or exclusions may not apply to you.

Get the most out of your Novatto faucet by registering!

By registering, you also are initiating the product's warranty. Plus you will receive product information, helpful tips, learn of special events and much more.

TYPE ONE ASSEMBLY

Steps to Complete Your Faucet Install

Applicable for the following faucet series:

GF-057	GF-136	BM-008	BM-359	NBF-061
GF-123	GF-365	BM-012	NBF-016	NBF-084
GF-135	GF-368	BM-116	NBF-005	

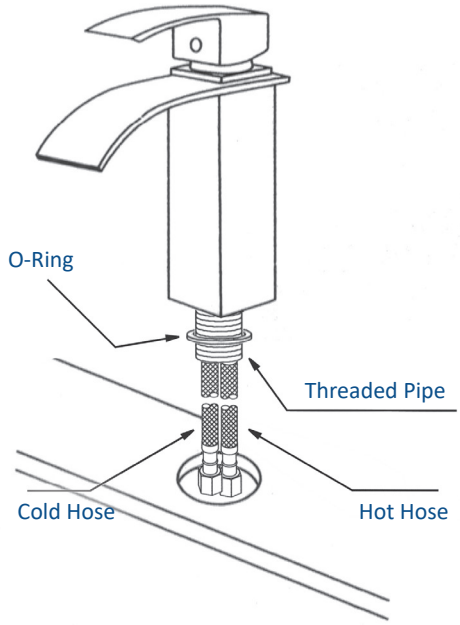

- **Turn the handles** on both the hot and cold water supply lines off so the water will not be running through the pipes. These water supply lines will be located under the sink in the cabinet.
- **Screw the pipe** on to the faucet and make sure the O-ring is on the faucet base. Fasten the hot and cold flexible hoses into the water supply holes on the bottom of the faucet if necessary.
- **Carefully lower** the faucet through the drilled hole.
- **Slide** the rubber washer and the 1.5-inch metal washer onto the pipe and tighten the fastener.
- **Attach the flexible hose** to the supply line source. The flexible hose on the right should be attached to the cold water supply line. The flexible hose on the left should attach to the hot water supply line. Tighten these connections accordingly.
- **With the faucet's** lever wide open, slowly turn the handles on the hot and cold water supply lines to the open position to your desired flow rate. Allow the faucet to run for a couple minutes to get rid of any air pockets in the pipes.

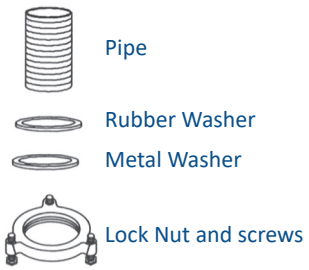

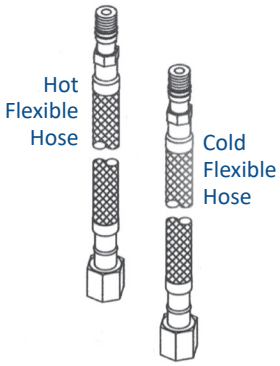

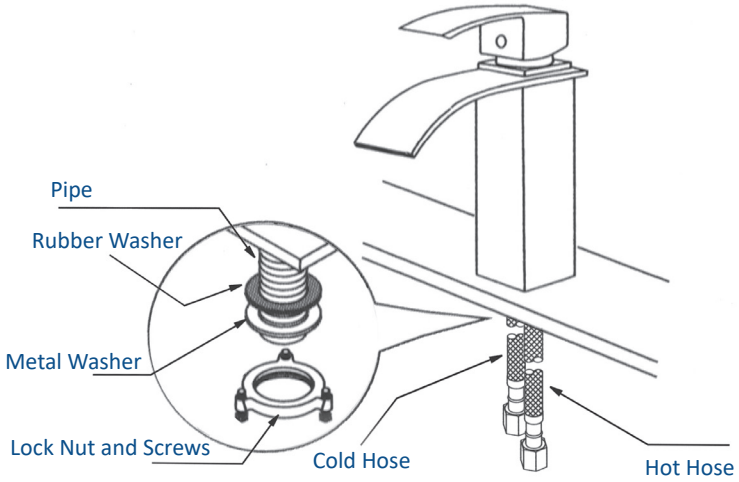

TROUBLESHOOTING TIPS

Issue	Reason	Solution
Leakage under the handle	Lock nut has come loose; Ceramic cartridge may be defective	Tighten locking nut; Remove cartridge, check for cracks
Water will not shut off completely	Cartridge may be defective	Remove ceramic cartridge, check for cracks
Finish is changing color or is shiny	Abrasive cleaners, soaps or other factors constantly in contact with it.	Stop using abrasives; Replace parts
Leaking from under the body	Cracked casing inside; Supply lines may be loose	New faucet needed; Tighten supply lines

TYPE TWO ASSEMBLY

Steps to Complete Your Faucet Install

Applicable for the following faucet series:

GF-001	GF-010
GF-002	GF-011

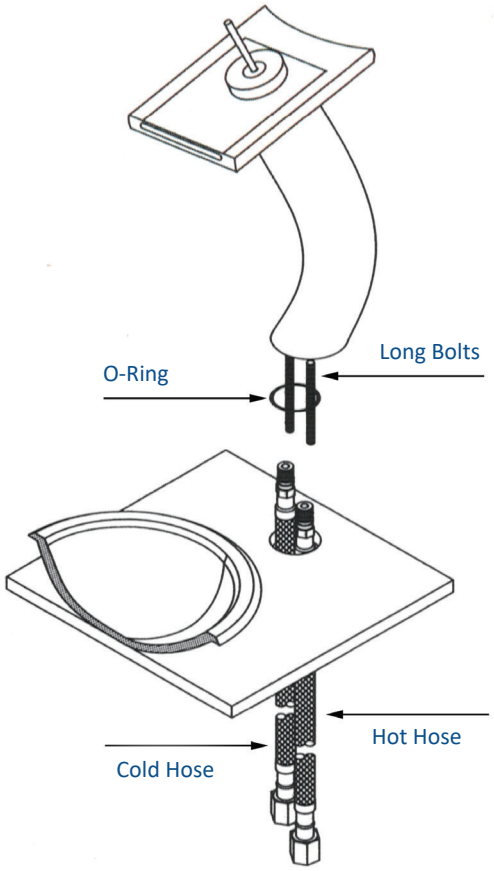

- **Turn the handles** on both the hot and cold water supply lines off so water will not be running through the pipes. These pipes will be located under the sink in the cabinet.
- **Fasten the two bolts** into the two threaded holes in the faucet. Make sure the O-ring is on the base of the faucet. Fasten the hot and cold flexible hoses into the water supply holes on the bottom of the faucet if necessary. Lower into the faucet hole.
- **Holding the faucet** in place at the desired position, slide the half moon rubber washer and metal washer up the bolts. Take the two lock nuts and tighten accordingly.
- **Attach the flexible hose** to the supply line source. The flexible hose on the right should be attached to the cold water supply line. The flexible hose on the left should attach to the hot water supply line. Tighten these connections accordingly.
- **With the faucet's** lever wide open, slowly turn the handles on the hot and cold water supply lines to the open position to your desired flow rate. Allow the waterfall faucet to run for a couple minutes to get rid of any air pockets in the pipes

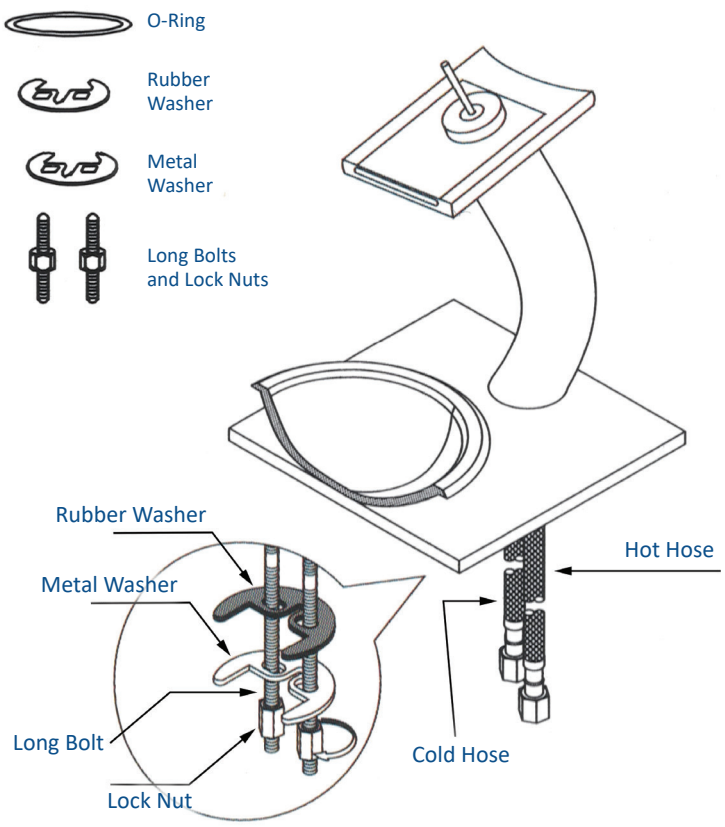

Please Note:

- Review and abide by all building and plumbing codes
- Standard codes for Novatto faucets: cUPC/CSA/AB1953
- Novatto faucets need to be installed by a professional
- A 1.5" faucet hole is needed for installation
- Max counter thickness 2"

TOOLS NEEDED FOR ASSEMBLY

(not included)

Questions, problems, missing parts? Before returning to your retailer, call our customer service department at 844.404.4242, 8:00 a.m. - 5 p.m., MT, Monday - Friday or email us at: support@novatto.com

Glacier Ice Faucet and Sink professional sealer kit will not only restore sinks, faucets and shower doors from mineral buildup and hard water spots, it will also protect from future corrosion, oxidation, mold and mildew. Treats up to 100 square feet.

How should I care for my Novatto Faucet?

For the absolute best cleaning results seal and clean your faucet with Glacier Ice. This will help to seal the faucet and prevent hard water spots and mineral build up. It also has a patented formula for removing oxidation and mineral build up. Do not use cleaners containing abrasive cleansers, ammonia, bleach, acids, waxes, alcohol or other solvents. Use a soft cloth or sponge and rinse with soap and water. Rinse and dry any excess cleaner which may land on adjacent surfaces. The effectiveness of all cleaners depends on factors like water hardness, temperature and condition of product being cleaned.

FAQs

How far back from the edge of the sink should the faucet hole be drilled?

The distance depends on the type of faucet used with the sink. Typically 1-3-inches is ideal.

What size hole is needed for installation?

All our vessel faucets need a 1.5-inch diameter hole for install.

Are replacement parts available?

Yes, they sure are. We carry replacement parts for all of our faucets. Parts are available free of charge when covered under warranty.

Do your faucets have a lifetime warranty?

Yes, all of our faucets carry a Limited Lifetime Warranty.

Where should the faucet hole be placed?

The placement of the faucet is a matter of preference, most faucets, however, are centered to the sink's drain. Also make sure there is clearance between the back-splash and the faucet's handle.

What type of cartridge does the faucet have?

All Novatto's vessel faucets use a high-pressure ceramic cartridge.

More questions? Feel free to contact our technical support team, Monday - Friday 8:00 a.m. - 5 p.m., MT, P: 844.404.4242, or email us at: support@novatto.com. More info is also available on our website.

THANK YOU

We would like to take this opportunity to thank you for choosing Novatto. We hope you are truly satisfied with our product(s) and enjoy it/them for years to come. As a small business, we learn the most from you, the customer. Please visit the link to the right, leave us a review with a good high resolution picture and you could win a $25 Amazon or Visa gift card.

It's easy as...

- **Go to novatto.com**
- **Go to your product's page, scroll 1/2 way down**
- **On the right, click the white button "*Write a review*"**
- **Review, submit... enjoy!**

NOVATTO
WHERE STYLE FLOWS

Novatto I P: 844.404.4242
support@novatto.com
Novatto.com