Crue® | K-22974

Touchless pull-down kitchen sink faucet with three-function sprayhead

Features

- Touchless on/off with a wave of your hand or an object such as a pan
- Response® technology uses a state-of-the-art motion sensor for reliable touchless activation
- AC-powered operation—no batteries to replace
- Three-function pull-down sprayhead with touch control allows you to switch between aerated stream, ring spray and Boost technology
- ProMotion® technology's light, quiet braided hose and swiveling ball joint make the pull-down sprayhead easier and more comfortable to use
- MasterClean™ sprayface features an easy-to-clean surface that withstands mineral buildup and maximizes spray performance
- DockNetik® secure docking system locks sprayhead into place when not in use

Sustainability

Available Colors/Finishes

Color tiles intended for reference only.

	CP	Polished Chrome
	VS	Vibrant Stainless
	BL	Matte Black
	2MB	Vibrant Brushed Moderne Brass

1-800-4KOHLER (1-800-456-4537)
Kohler Co. reserves the right to make revisions without notice to product specifications.
For the most current specification sheet, go to www.kohler.com USA or www.kohler.ca Canada.
4-15-2026 5:46 - US-CA

Codes/Standards

ADA, CSA B651 compliant when installed to the specific requirements of these regulations.

ADA | CSA B651

ASME A112.18.1/CSA B125.1
NSF/ANSI/CAN 372
NSF/ANSI/CAN 61
DOE - Energy Policy Act 1992
California Energy Commission (CEC)
ADA
ICC/ANSI A117.1
CSA B651

Technical Information

All product dimensions are nominal.

Handle

Handle Style/ Type:	Lever

Spout

Spout Reach:	8-9/16" (217 mm)

Flow Rate

Faucet Flow Rate:	1.5 gpm (5.7 l/min)

Valves

Included Valves:	Ceramic disc, Thermostatic, Volume Control

Recommended Products/Accessories

K-77685 Single-cartridge water filtration system

K-77686 Double-cartridge water filtration system

K-77687 Single replacement filter cartridge

K-77688 Two-pack replacement filter cartridges

1012715 Deep Rough-In

Required Electrical Service

One dedicated circuit required, protected with Class A Ground-Fault Circuit-Interrupter (GFCI). Outside North America, this device may be known as a Residual Current Device (RCD).

120 V, 0.15 A, 50/60 Hz

Electrical Component Ratings

Power Cord Length:	72.0" (1829 mm)

Warranty

See website for detailed warranty information.

KOHLER® Electronic Faucets, Valves, and Controls Five-Year Limited Warranty|KOHLER® Faucet Lifetime Limited Warranty

1-800-4KOHLER (1-800-456-4537)
Kohler Co. reserves the right to make revisions without notice to product specifications.
For the most current specification sheet, go to www.kohler.com USA or www.kohler.ca Canada.
4-15-2026 5:46 - US-CA

THE BOLD LOOK OF KOHLER

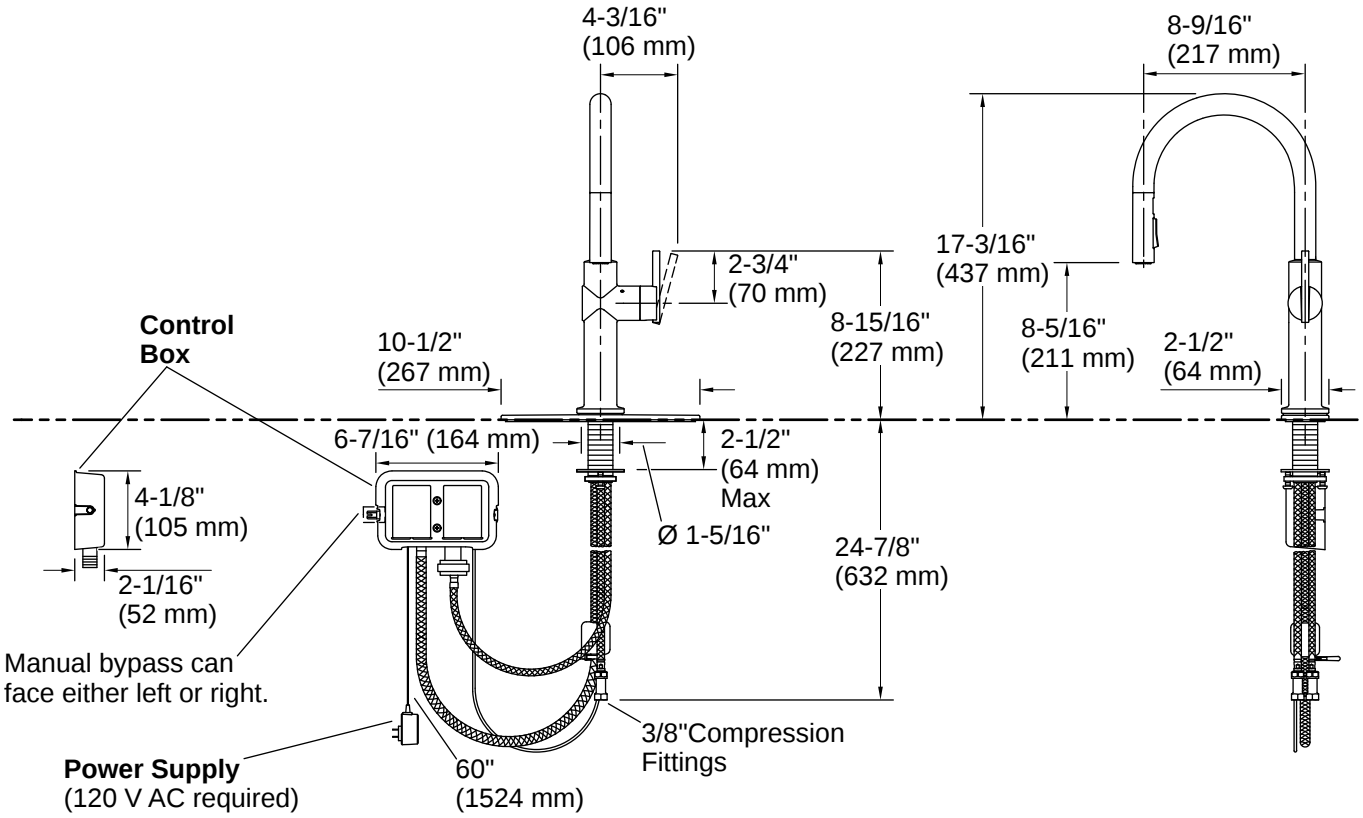

Installation

- Requires nonswitched undercounter outlet
- Single-hole or three-hole installation (escutcheon plate included)

Installation Notes

Install this product according to the installation instructions.

ADA compliant for faucet handles only
ADA, CSA B651 compliant when installed to the specific requirements of these regulations.

1-800-4KOHLER (1-800-456-4537)
Kohler Co. reserves the right to make revisions without notice to product specifications.
For the most current specification sheet, go to www.kohler.com USA or www.kohler.ca Canada.
4-15-2026 5:46 - US-CA
THE BOLD LOOK OF KOHLER