KOHLER®

Stronghold® | K-4731-CA

Commercial elongated toilet seat with antimicrobial agent

Features

- Commercial elongated open-front seat without lid
- Antimicrobial agent inhibits growth of odor-causing bacteria, mold, and mildew. This product does not protect users against bacteria, viruses, or other disease organisms. Always clean and wash this product thoroughly before and after each use
- Ergonomic contour adds additional comfort
- Integrated lift tab on seat edge offers a more hygienic solution for raising and lowering
- Check hinge prevents seat from leaning back against tank or flushometer



1-800-4KOHLER (1-800-456-4537)
Kohler Co. reserves the right to make revisions without notice to product specifications.
For the most current specification sheet, go to www.kohler.com USA or www.kohler.ca Canada.
4-15-2026 3:12 - US-CA

THE BOLD LOOK OF KOHLER®

Codes/Standards

Plumbing codes may require elongated toilets and elongated, open-front seats in public bathrooms.

Technical Information

All product dimensions are nominal.

Seat Shape Type:	Elongated
Seat Front Type:	Open-front
Seat Hinge Type:	Check
Seat-Mounting Holes:	5-1/2" (140 mm)

Material

- Plastic construction

Warranty

See website for detailed warranty information.

KOHLER® One-Year Limited Warranty

1-800-4KOHLER (1-800-456-4537)
Kohler Co. reserves the right to make revisions without notice to product specifications.
For the most current specification sheet, go to www.kohler.com USA or www.kohler.ca Canada.
4-15-2026 3:12 - US-CA

THE BOLD LOOK OF KOHLER®

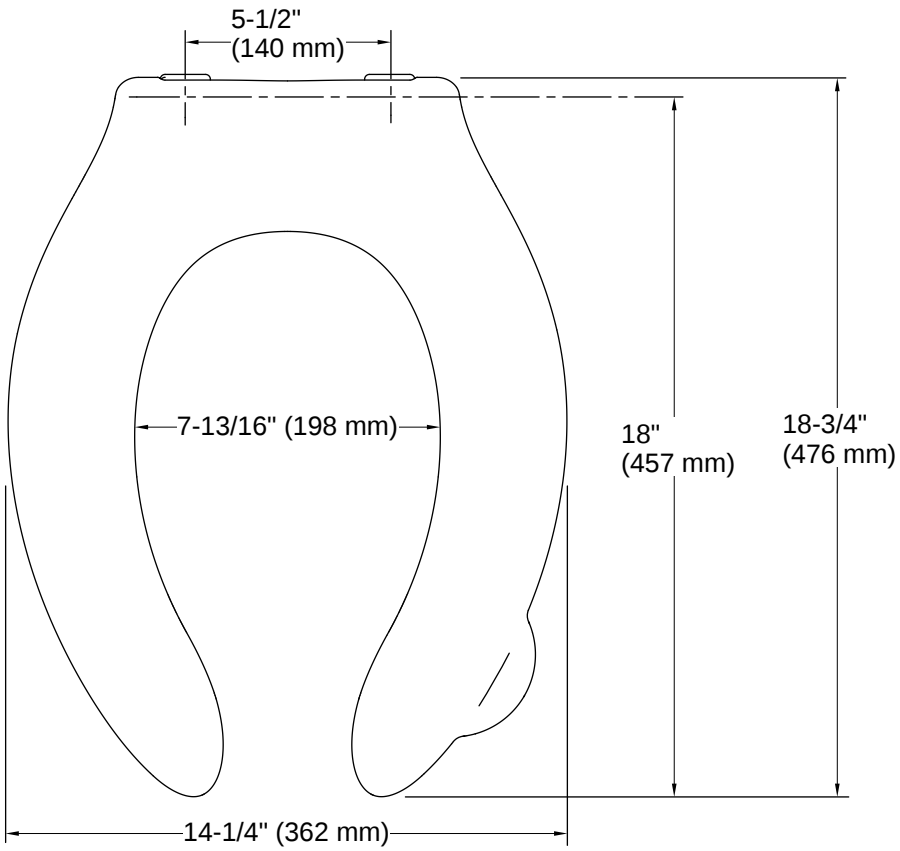

Installation Notes

Install this product according to the installation instructions.

1-800-4KOHLER (1-800-456-4537)
Kohler Co. reserves the right to make revisions without notice to product specifications.
For the most current specification sheet, go to www.kohler.com USA or www.kohler.ca Canada.
4-15-2026 3:12 - US-CA

THE BOLD LOOK OF KOHLER.