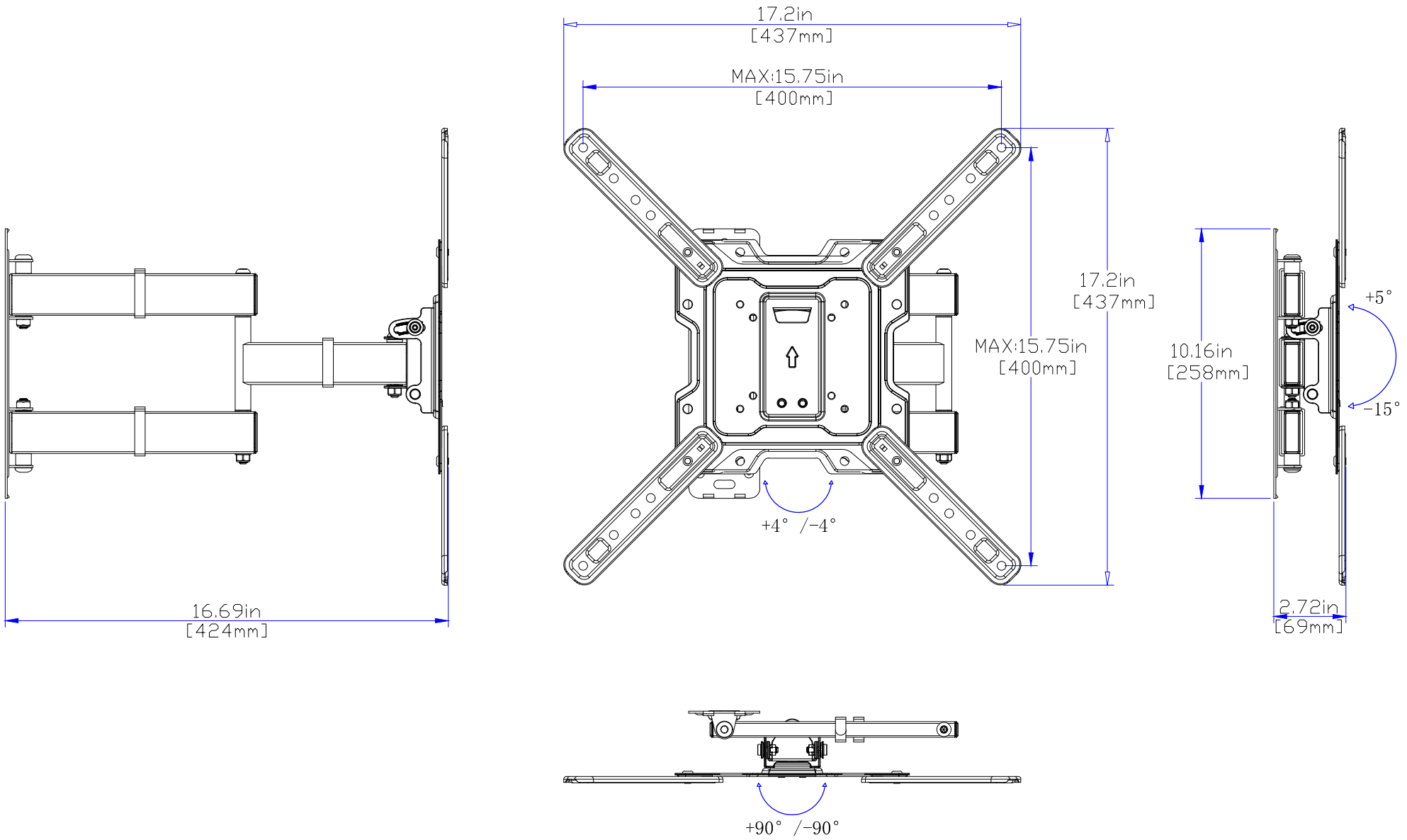
17.2in
[437mm]
MAX:15.75in
[400mm]
17.2in
[437mm]
MAX:15.75in
[400mm]
+4° /-4°
16.69in
[424mm]
10.16in
[258mm]
+5°
-15°
2.72in
[69mm]
+90° /-90°