INSTALLATION INSTRUCTIONS

Included In the Package:

1. Bathroom Faucet
2. Rubber Washer x 2
3. Plastic Fixing Nut x 2
4. Plastic Plate
5. Hot and Cold Water Supply Hoses
6. Pop Up Drain

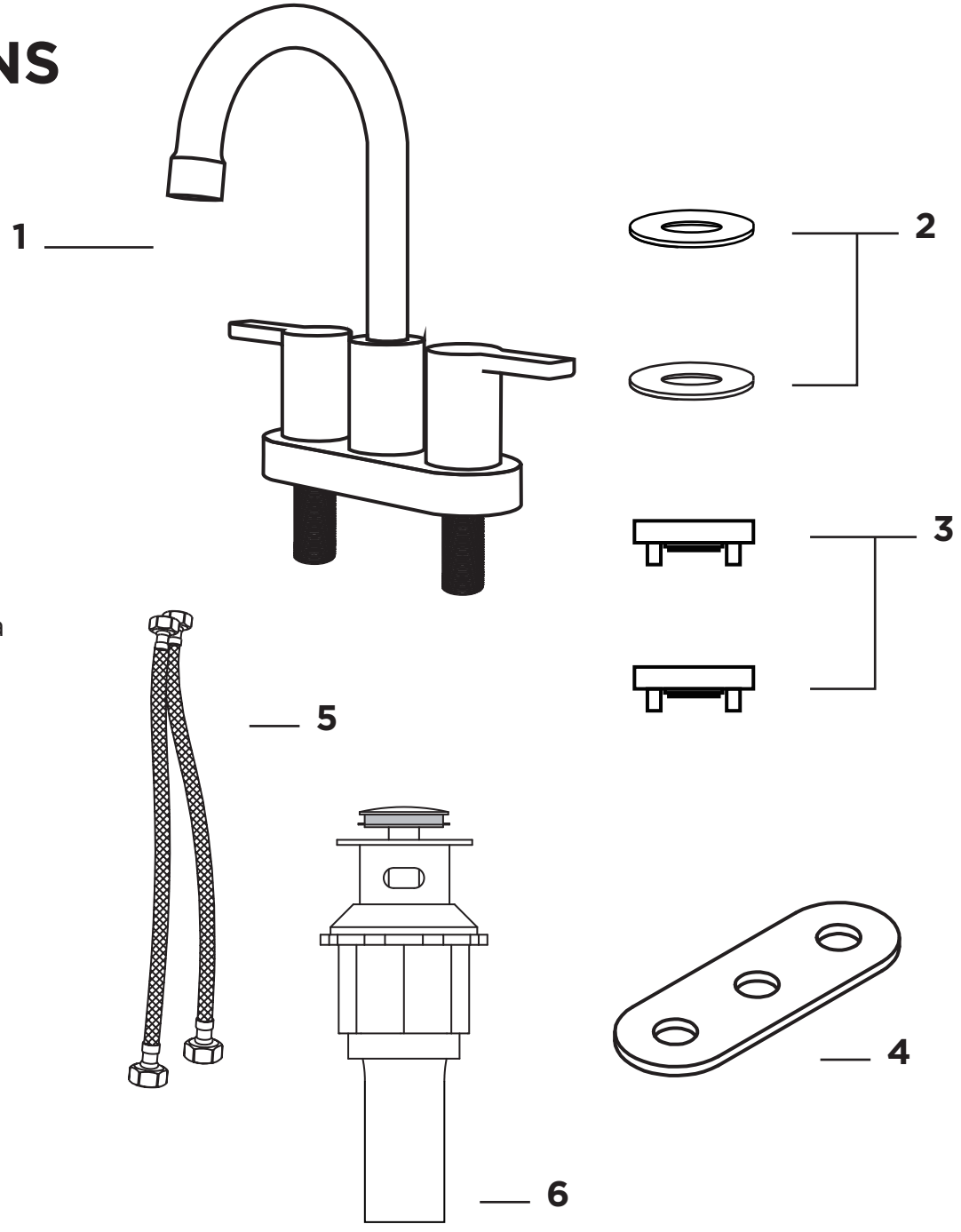

Before Installation:

- Turn off the water supply valves. Clean the mounting area of the sink.
- Recommended width of mounting area is 102mm (4”) measured between centers of outside mount holes.
- Diameter of mount holes must be between 25.4mm-38mm (1.00”-1.50”).
- Max countertop thickness is 30mm (1.20”)
- Water pressure Min 0.05MPa (7 psi) / Max 0.75MPa (109 psi)
- Water temp Min ≥ 20˚C (68˚F) / Max ≤ 85˚C (185˚F)

Installation Steps:

1. Place the plastic plate at the bottom of the tap.

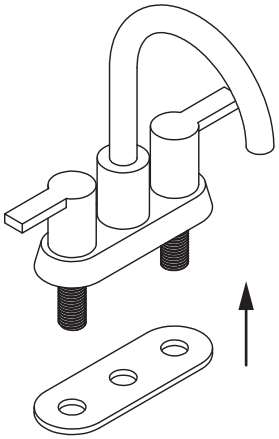

2. Put the faucet in the sink.

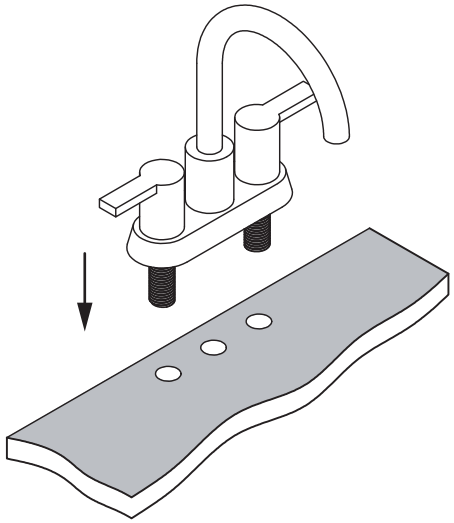

3. Place the rubber washer and plastic fixing nut in the bottom of the cold and hot water handles in turn.

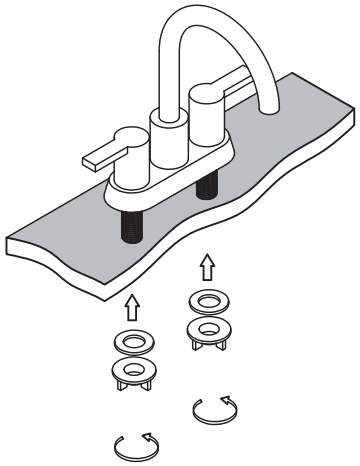

4. Connect the top of the hot and cold water pipes to the bottom of the hot and cold handles.

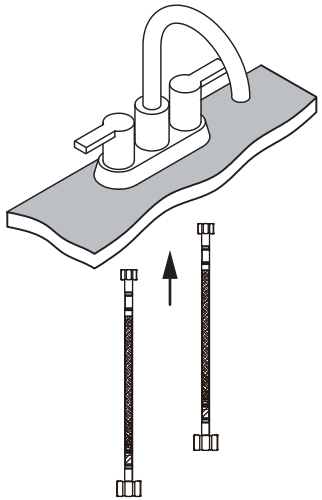

5. Notice: Open the water valve at this time, to drain out the sewage in the water pipe for 15 seconds and then close it.

6. Screw the water inlet hose nut onto the water valve and tighten it with a wrench. Finally, open the water valve and enjoy your faucet. (If your valve thread doesn't match, please contact the seller to get the thread adapter.)

7. Install the pop-up sink drain stopper.

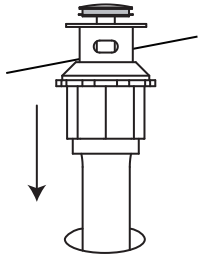

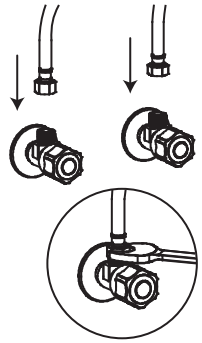

Maintenance:

- Always operate the faucet gently to ensure years of use.
- To maintain the finish, always blot dry any water on the faucet surface. Clean with a damp non-abrasive sponge and wipe dry with a clean soft cloth.
- Although the finish is very durable, certain cleaners can damage it. DO NOT use detergent powder, polishing powder, a nylon brush, or anything that may scratch the finish.
- DO NOT use acidic cleaners on the faucet.
- If air temperature falls below freezing (0˚C / 32˚F), run the faucet to prevent freezing.
- Shut off water supply valve when not in use for long periods.
- We reserve the right to make revisions to product design without notice.