Care and Maintenance

WARNING: RISK OF ELECTRIC SHOCK Ensure the electricity is shut off. Either remove the fuse or turn off the circuit breaker before cleaning.

- □ See SAFETY INFORMATION before proceeding. Routine maintenance should be done at least once a year.
- □ Never use solvents, thinner or harsh chemicals for cleaning the fan.
- □ Do not allow water to enter the motor.
- □ Do not immerse metal parts in water.
- □ Clean the humidity sensor dust cap once every half year.

Clean the humidity sensor cover

① Pull down the light grille on one side
② Pull up the finger latch of the sensor cover, and remove the cover for cleaning.
③ Then reinstall the sensor cover and light grille.

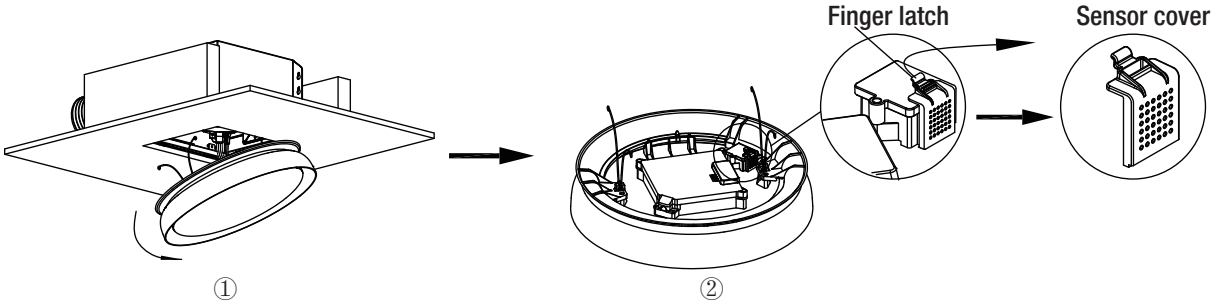

Specifications

FOR USE WITH DIMMER MODELS:

LUTRON: DVCL-153PR, MACL-153MLH-WH, P-PKG1W-WH-R, STCL-153PH-WH

LEVITON: R11-DSL06-1TW, R00-RNL06-0TW, R68-06674-POT, R02-DW6HD-2RW

LEGRAND: RHCL453PNICCV4

TP-LINK: HS220

COMMERCIAL ELECTRIC: HPDA311CWB

For a complete list of compatible dimmers, please visit Homedepot.com

Model NO.	Airflow	Main Light	Night Light	Voltage	Duct Diameter	Sound Output	Power Consumption		Weight	Ceiling Opening Dimensions Requirements
							Fan	Light		
BF1107	80/110 CFM	1500 lm	100 lm (2200K)	AC 120 V 60 Hz	4 in.	0.8/1.0 Sone	30W	22W	12.14 Lbs	10 1/4 in. x 9 3/8 in.
BF1109								23W	12.18 Lbs	
BF1110									12.32 Lbs	