Commercial Electric™

Item #1006 316 039
Model #XD2615-1A

USE AND CARE GUIDE

FULL MOTION TV WALL MOUNT FOR FLAT PANEL TVS (FITS VESA 75/100/200/300/400)

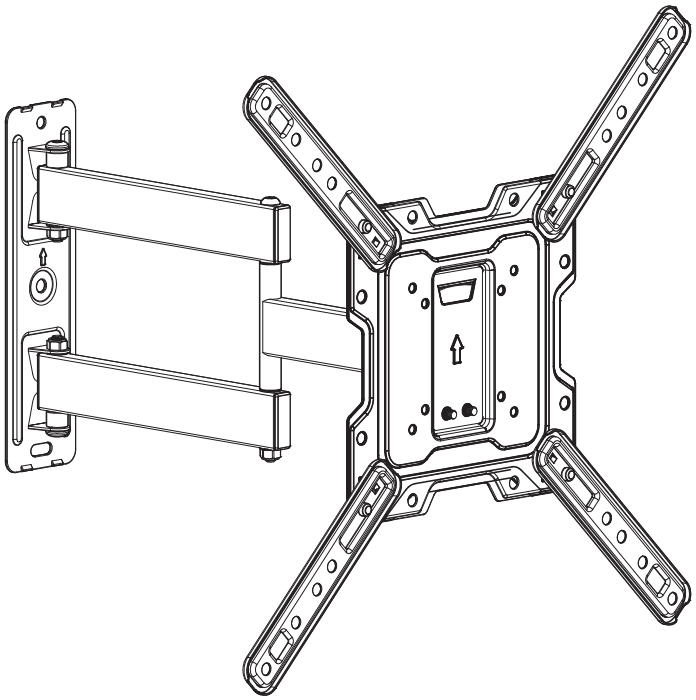

Questions, problems, missing parts? Before returning to the store,
call Commercial Electric Customer Service
8 a.m. - 7 p.m., EST, Monday - Friday, 9 a.m. - 6 p.m., EST, Saturday

1-877-527-0313

HOMEDEPOT.COM

For additional support, call the manufacturer at 1-800-747-6558.

THANK YOU

We appreciate the trust and confidence you have placed in Commercial Electric through the purchase of this wall mount system. We strive to continually create quality products designed to enhance your home. Visit us online to see our full line of products available for your home improvement needs. Thank you for choosing Commercial Electric!

Table of Contents

Safety Information 2
Warranty 2
Troubleshooting 2
Pre-Installation 3
Installation 7
. 11

Safety Information

Before you begin, carefully read and understand the instructions in this manual. Please follow the instructions in the order presented in this manual and observe all warnings and cautions.

WARNING: Failure to provide adequate structural strength for this component can result in physical injury and/or damage to equipment. It is the installer's responsibility to make sure the structure to which this component is attached can support four times the combined weight of all equipment. Reinforce the structure as required before installing the component.

WARNING: This wall or ceiling mount is intended for use only with the maximum weights indicated. Use with products heavier than the maximum weights indicated may result in collapse of the mount and its accessories causing possible injury. This mount has been tested to support 77 lbs. (35 kgs). Do not exceed this weight.

WARNING: Observe all safety measures at all times during the installation of this product. Use proper safety gear and tools during the installation process to prevent physical injury.

CAUTION: Never allow children to climb on or play with the product.

CAUTION: NEVER use this TV wall mount for DRYWALL installation.

CAUTION: Do not sit or stand on the product.

CAUTION: Improper handling can result in cuts and lacerations.

CAUTION: Improper installation may cause property damage and/or personal injury, so the installation must be done by two qualified contractors. The manufacturer is not liable for damage or injury caused by incorrect mounting, assembly or use.

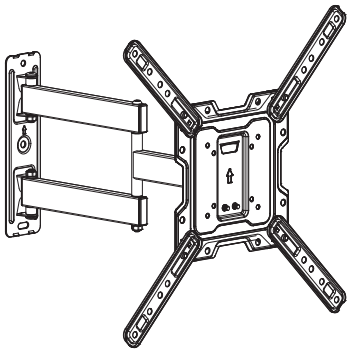

This mount has been tested to support a television with a minimum of 23 in. (58.42 cm) and a maximum 63 in. (160 cm) diagonal screen and a weight up to 77 lbs. (35 kgs).

Warranty

The manufacturer warrants that it will replace or repair this item, free of charge, at the manufacturer's sole discretion, should it prove defective in materials or workmanship.

This warranty does not apply to:

- ☐ Normal wear and tear
- ☐ Friction damage
- ☐ Coating defects
- ☐ Defects caused by loosened screws, nuts, or bolts
- ☐ Improperly mounting the bracket to the wall
- ☐ Improperly installing the bracket to the display
- ☐ Failure to properly follow installation instructions
- ☐ Modification or repairs not made or authorized by the manufacturer
- ☐ Loading beyond the permitted load
- ☐ Intentional misuse

Contact the Customer Service Team at 1-877-527-0313 or visit www.HomeDepot.com.

Pre-Installation

ENSURING THIS IS THE CORRECT WALL MOUNT FOR YOU

IMPORTANT: Review this section carefully before you proceed with this installation to ensure that this is the correct TV Wall Mount for you.

This TV Wall Mount is the correct wall mount for you if:

- □ Your TV VESA size is equal to or no greater than 400 mm x 400 mm (16 in. x 16 in.).
- □ Your TV (including any accessories) weighs less than 77 lbs (35 kg).

If your TV is greater than these TV VESA measurements and weighs more than 77 lbs (35 kg), then this TV Wall Mount is NOT compatible with your TV.

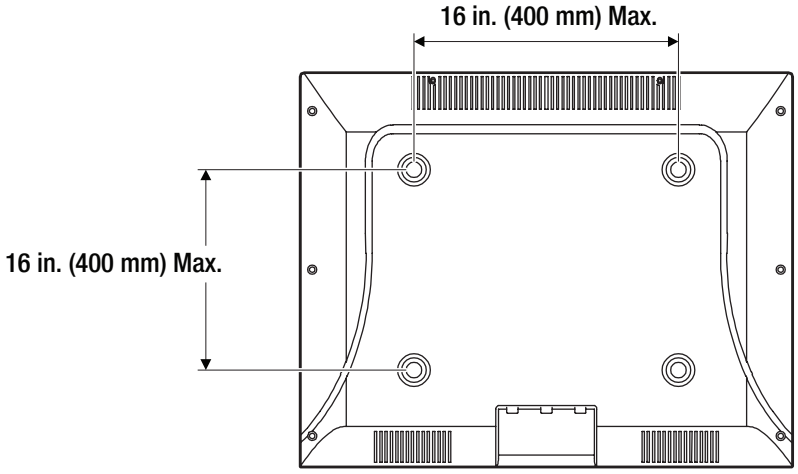

PLANNING THE INSTALLATION

Compare all the parts in the package with the Hardware Included and Package Contents lists in this manual. If any part is missing or damaged, do not install this wall mount system and call customer service at 1-877-527-0313 or visit www.HomeDepot.com.

This wall mount bracket is compatible with VESA 75/100/200/300/400 mm mounting holes.

PLANNING THE WALL PLACEMENT

CAUTION: Ensure the wall you select is a weight-bearing wall. Failure to observe this precaution can result in serious physical injury and/or property damage. Consult a professional installer or contact customer service if you have any questions.

When selecting a wall to mount your display, keep the following in mind:

- □ Select a place with easy access to power outlets, cable input sources, and connections for the speakers and accessories.
- □ Avoid direct sunlight, heat, and vibrations and do not place in the direct flow of traffic.
- □ Select a weight-bearing wall. The wall must be able to safely support four times the combined load of the equipment and all attached hardware and components.

PLANNING THE MOUNTING HEIGHT

The optimal viewing height is to center the display at eye level when seated. Many people consider this to be too low for a wall mount, and commonly use the following rule for placement:

- □ Position the bottom of the display no higher than eye level when seated, and the top of the display no higher than eye level when standing. Anything within these limits should normally provide a comfortable viewing experience.

Pre-Installation (continued)

ENSURING THE WALL STABILITY

Carefully inspect the wall area you have selected. Examine the wall surface before you begin drilling.

WARNING: Do not drill near electrical wiring and water pipes.

CAUTION: Wood studs must be no smaller than 2 x 4 in. in size. Ensure the surface covering does not exceed 5/8 in.

CAUTION: Concrete walls must have a minimum thickness of 5.5 in. Ensure the surface covering does not exceed 3/8 in.

CAUTION: Do not install this product on a concrete block.

- □ For concrete walls, check for damaged or loose concrete and do not drill in those areas.
- □ For brick walls, never drill into the mortar between the blocks.
- □ For wood studs, locate the wall studs and drill in the center of the stud.

TOOLS REQUIRED (NOT INCLUDED IN THE PACKAGING)


Power drill


5/32 in. (4 mm) wood drill bit or 3/8 in. (10 mm) masonry drill bits


Phillips screwdriver


Stud finder

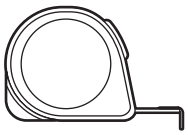
Measuring tape


Pencil

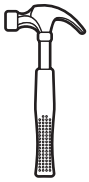
Hammer


Socket tool


Toothpick

Pre-Installation (continued)

HARDWARE INCLUDED

NOTE: Hardware is not shown to actual size.

NOTE: The hardware included is suitable for mounting to walls made of brick, solid concrete, or wood studs covered with drywall. If your mounting situation is different, please consult a qualified installer or contact customer service at 1-877-527-0313 or visit www.HomeDepot.com. For additional support, you can also call the manufacturer at 1-800-747-6558.

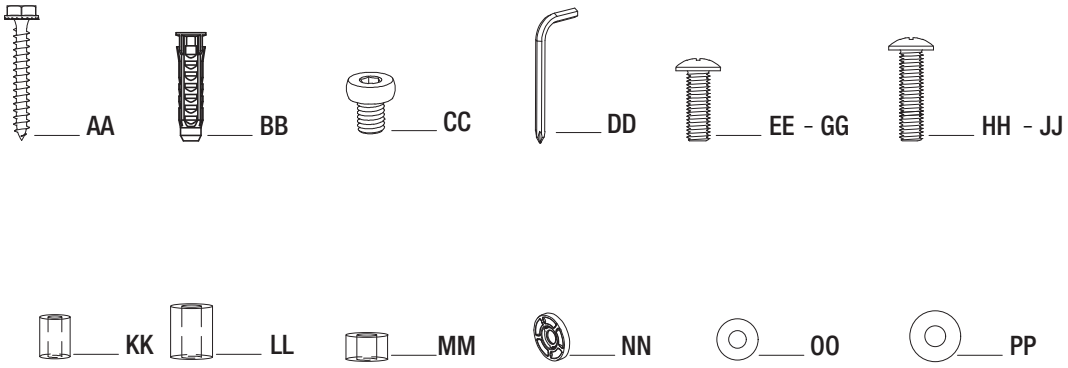

Part	Description	Quantity
AA	Lag bolt with washer	3
BB	Nylon anchor	3
CC	M6x8 mm bolt	4
DD	4 mm hex wrench	1
EE	M4x12 mm bolt	4
FF	M6x12 mm bolt	4
GG	M8x20 mm bolt	4
HH	M4x30 mm bolt	4

Part	Description	Quantity
II	M6x35 mm bolt	4
JJ	M8x35 mm bolt	4
KK	M6x17 mm spacer	4
LL	M8x22 mm spacer	4
MM	M8x10 mm spacer	4
NN	M8x2.5 mm spacer	8
OO	M4 washer	4
PP	M6 washer	4

Pre-Installation (continued)

PACKAGE CONTENTS

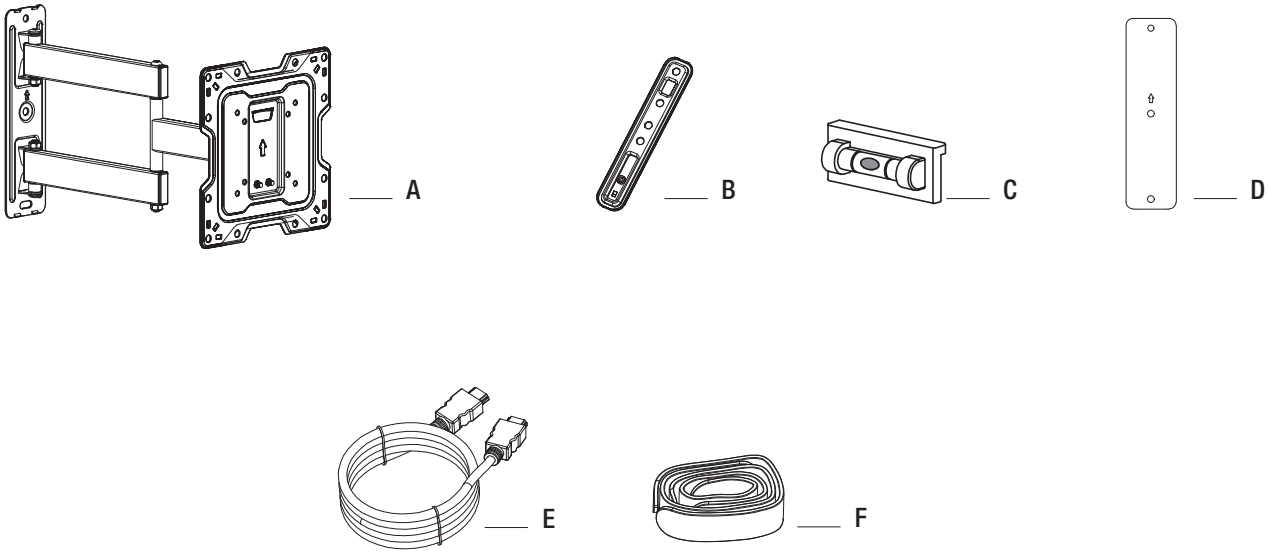

Part	Description	Quantity
A	Wall plate unit	1
B	Extension arm	4
C	Bubble level	1
D	Mounting template	1
E	HDMI	1
F	Velcro ties	3

Installation

1 Identifying the bolt diameter to use

To ensure proper mounting of the brackets to your TV, this mounting system includes several sizes of bolts (EE – JJ), washers (OO and PP), and spacers (KK – NN) that can be used in various combinations. Combinations are determined by the back style of the TV (flat, curved, or recessed) and the diameter and depth of those holes.

- □ Select the bolt (EE – JJ) diameter to use by inserting the various sized bolts (EE – JJ) (M4, M6, and M8) into the mounting holes in the back of your TV.

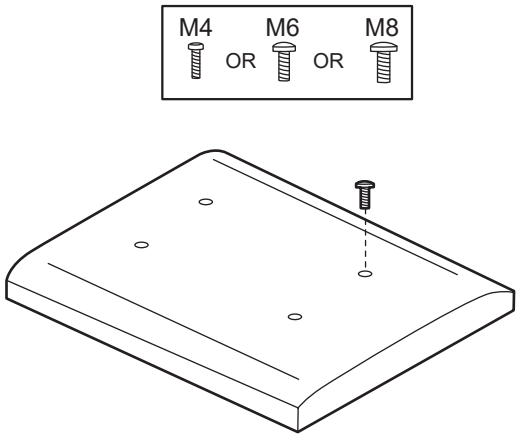

2 Identifying the bolt length to use

- □ Insert a straw or toothpick (not included) into one of the mounting holes on the back of your TV. If your TV is curved or recessed, place the proper sized spacer (KK, LL, MM, or NN) on top of one of the mounting holes first.
- □ Use a pencil to mark the depth of the mounting hole.
- □ Determine the proper bolt length to use by comparing the mark with the various bolts provided.

CAUTION: When the bolt is longer than the mark, choose a shorter bolt.

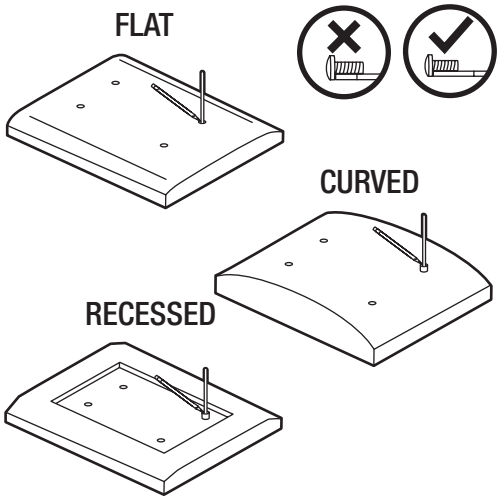

3 Separating the TV plate

- □ Use the hex wrench (DD) to remove the bolts (1) that hold the TV plate on the wall plate unit (A). Save these bolts for later.

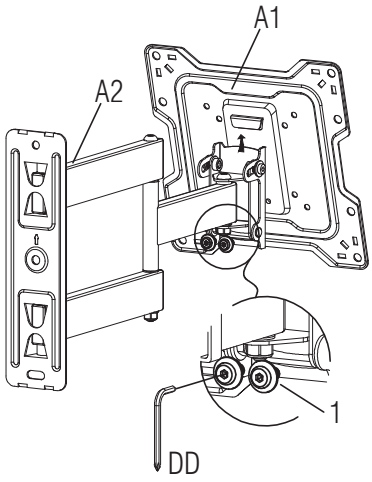

4 Attaching the mounting plate to the TV (VESA 75/100 and 200)

NOTE: If the back of the TV is not flat, or the bolts are too long, or there is interference between the TV bracket and cable inlets, we strongly recommend the use of spacers.

- □ If necessary, align the spacers (KK, LL, MM, or NN) over the mounting holes on the back of your TV.
- □ Position the wall plate (A1) over the TV and attach using the appropriately sized bolts (EE – JJ) and washers (OO or PP).

CAUTION: Do not overtighten the bolts as this could damage your TV.

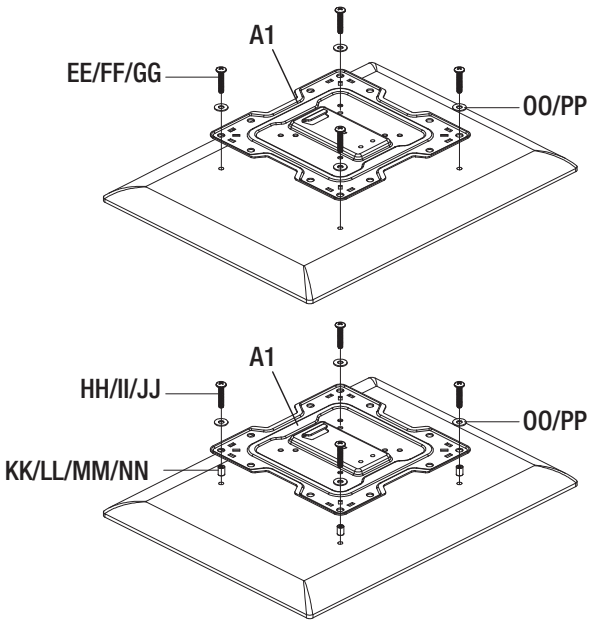

5 Attaching the mounting plate to the TV (VESA 300 and 400)

- □ Connect the extension arms (B) to the wall plate (A1) using the screws (CC).
- □ If necessary, align the spacers (KK, LL MM, or NN) over the mounting holes on the back of your TV.
- □ Position the wall plate assembly over the TV and attach using the appropriate sized bolts (EE - JJ) and washers (OO or PP).

CAUTION: Do not overtighten the screws as this could damage your TV.

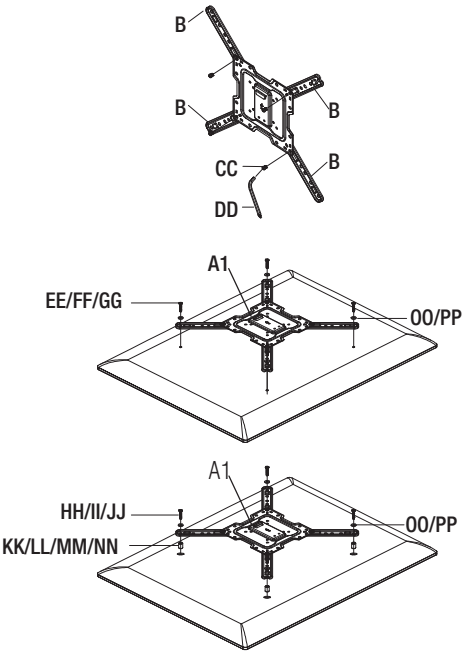

6 Marking the mounting holes

- □ Use the mounting template (D) to mark the mounting hole locations for attaching the wall plate unit (A) to the wall.
- □ Use the bubble level (C) to ensure the mount will be level before you drill the mounting holes.

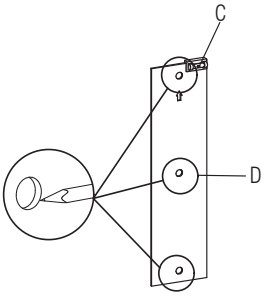

7 Drilling the mounting holes in a concrete/brick wall

If you are installing the mounting system into wood studs, proceed to step 8.

CAUTION: Avoid drilling near electrical wiring and water pipes. The mounting system must be attached to a weight bearing wall. Failure to observe all safety precautions can result in serious physical injury and/or property damage. Consult a professional installer or call customer service if you have any questions.

CAUTION: Do not drill into mortar between bricks or into loose concrete.

CAUTION: Never drill into hollow brick.

- □ Use 3/8 in. masonry bits (not included) to drill mounting holes in the concrete approximately 2.36 in. (6 cm) in depth.
- □ Insert the nylon anchors (BB) into the pre-drilled holes. You may have to use a hammer (not included) to gently tap the anchors fully into the wall.

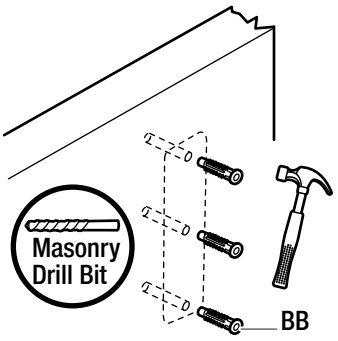

8 Drilling the mounting holes in a wood stud

CAUTION: Avoid drilling near electrical wiring and water pipes. The mounting system must be attached to a weight bearing wall and must be installed directly onto the center of the wood studs. Failure to observe all safety precautions can result in serious physical injury and/or property damage. Consult a professional installer or call customer service if you have any questions.

CAUTION: Wood studs must be no smaller than 2 x 4 in. in size and the surface covering no more than 5/8 in.

- □ Use a commercially-available stud finder (not included) to locate the stud centers in the wall. Studs are usually spaced 16 in. apart.
- □ Use a 5/32 in. (4 mm) wood drill bit (not included) to drill holes to a depth of 2.36 in. (6 cm).

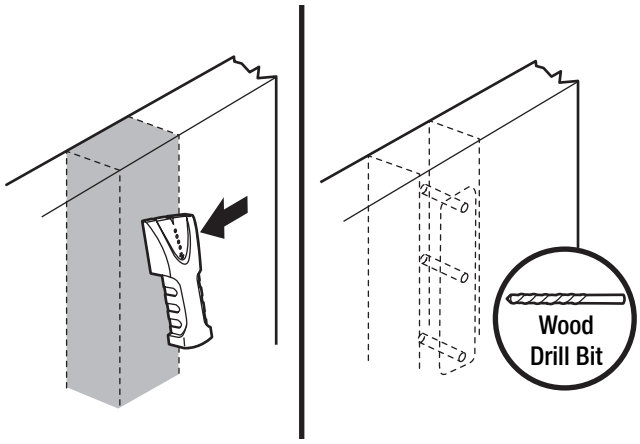

9 Attaching the mounting arm to the wall

- □ Align the wall plate unit holes with the pre-drilled holes in the wall.
- □ Attach the wall plate unit (A) to the wall using the lag bolts with the washers (AA). Tighten the bolts (AA) securely using a Phillips screwdriver and a socket tool (not included).

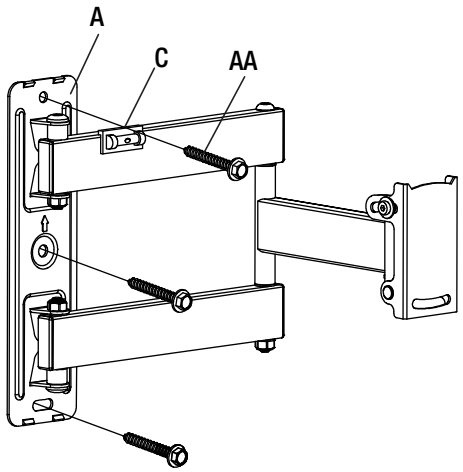

10 Attaching the TV to the wall plate unit

CAUTION: Use two or more people to complete this step.

- □ Align the wall plate (A1) with the end of the wall plate unit (A2) .
- □ Slide the tab (1) on the wall plate (A1) onto the top edge of the wall plate unit (A2).
- □ Attach the bottom end of the wall plate unit (A2) to the wall plate (A1) using the bolts (1) you removed in step 3.
- □ Use the bubble level (C) and angle the TV as necessary to ensure the TV is level before tightening in the next step.

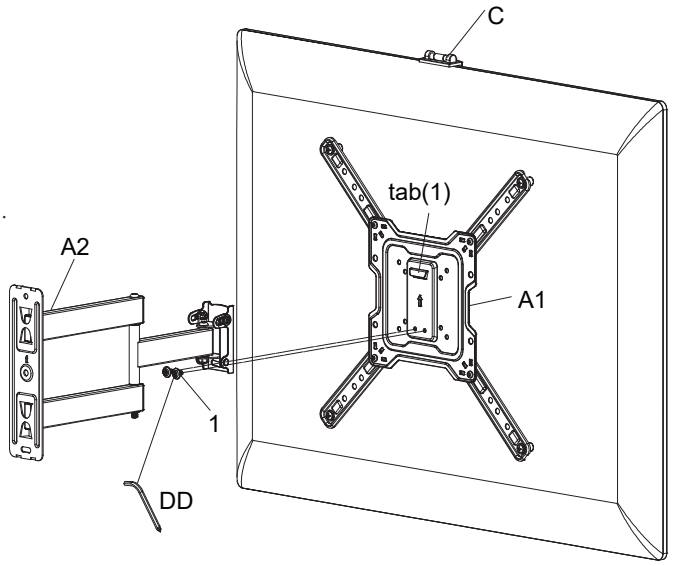

11 Adjusting the angle of the TV

- □ Adjust the angle of the TV by loosening the bolt (1) on the wall plate assembly (A). Refer to the figure for the various angle adjustments. Securely tighten the bolt (1) when you are finished.

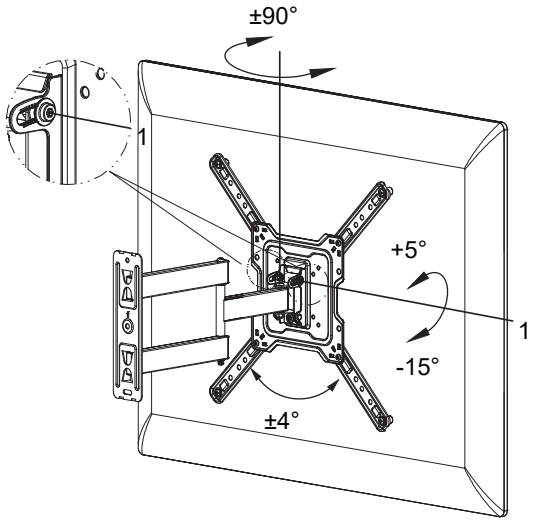

12 Manage TV cables orderly through the velcro ties.

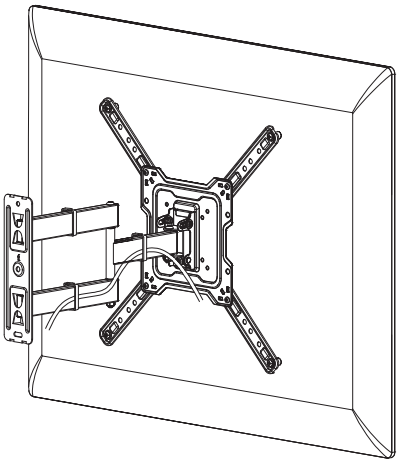

Troubleshooting

Problem	Solution
The cables are blocked by the mount or brackets. 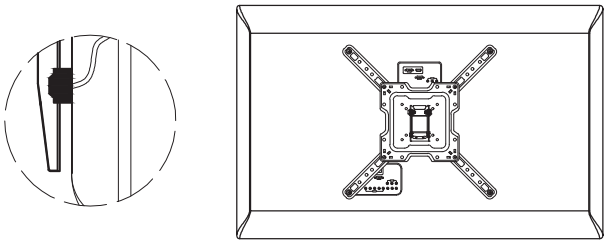	Solution 1 Add spacers between the bracket and the TV back. Plug in the cable first and then hang the TV. 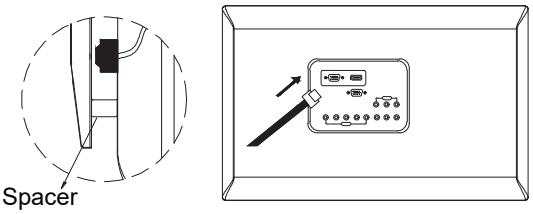 Solution 2 If the above solution does not help, please contact 1-800-747-6558 with information about your TV's model, size, and weight.

Problem	Solution
The TV keeps tilting. 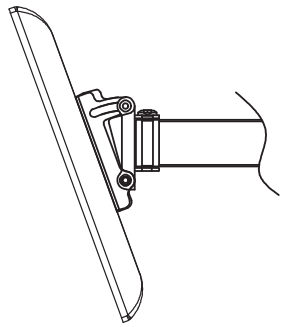	Solution 1 Fasten the two bolts in the rear plate with the hex wrench (DD). 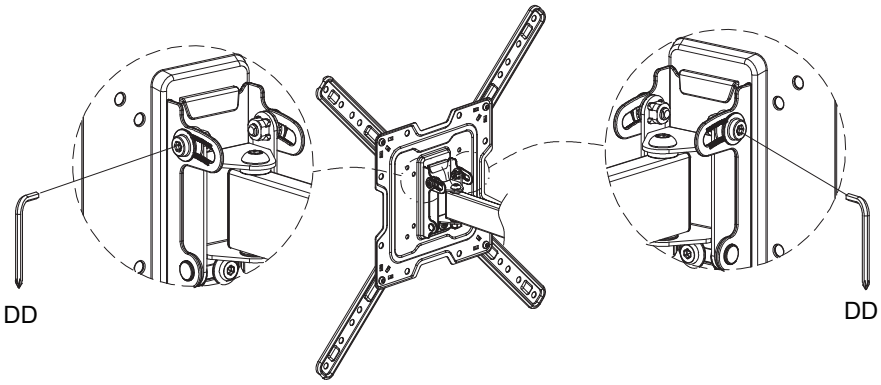 Solution 2 If the above solution does not help, please contact 1-800-747-6558.

Troubleshooting (continued)

Problem	Solution
The TV is not level or is out of balance.	**Solution 1** Check if the wall plate is level using the provided bubble level. If the wall plate is not level, adjust it to level. 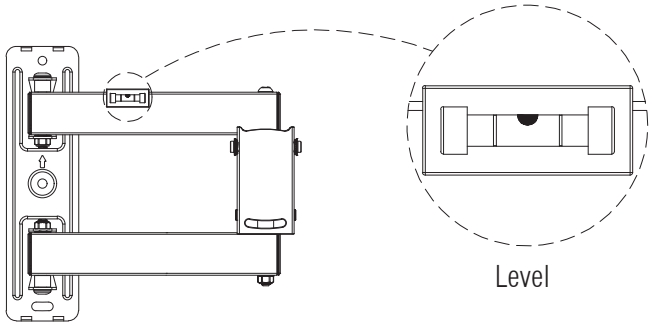 **Solution 2** Check if the TV plate is level. If the TV plate not level, adjust it to level. Use a hex wrench (DD) to loosen the two leveling bolts in the rear TV plate, hold the TV to adjust to level, and then fasten the leveling bolts tightly. 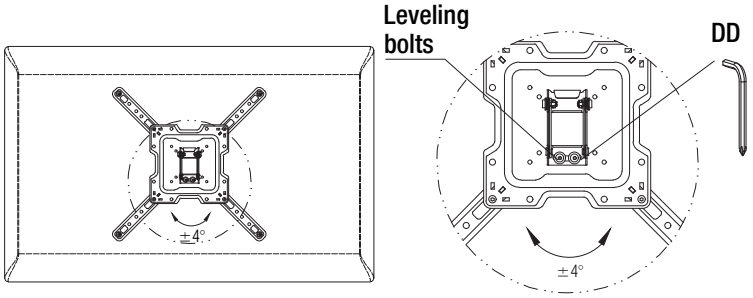 **Solution 3** If the above solutions do not help, please contact 1-800-747-6558.

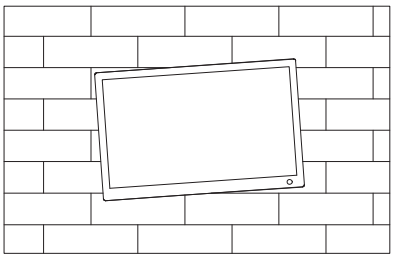

Troubleshooting (continued)

Problem	Solution
The arm moves stiffly. 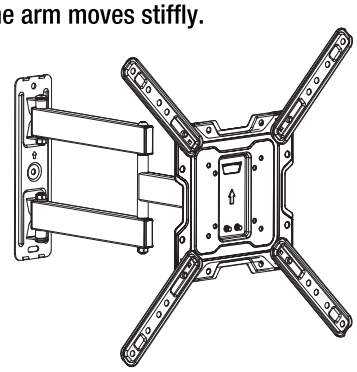	Apply lubricant (not included) to the arm's joint. 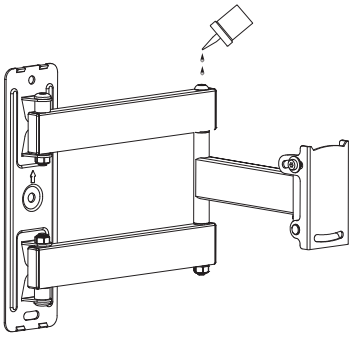

Problem	Solution
The bolt is difficult to screw into a wood stud. 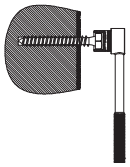	If the bolt is damaged, please contact customer service for a replacement bolt and follow the installation instructions. 1. Pre-drill the pilot holes to the required length. 2. Use an open wrench or socket wrench (not included), rather than power tool, which could damage the bolt. 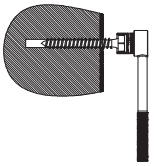

Problem	Solution
The bolts are too long for the bolt holes in the TV. 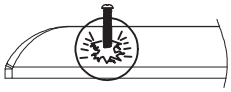	Solution 1 Add spacers / washers to accommodate the bolt length. 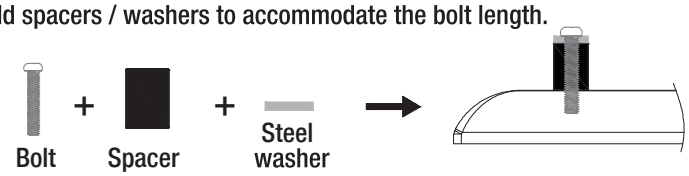 Solution 2 If the bolts are still too long, add 2 mm washers (provided). 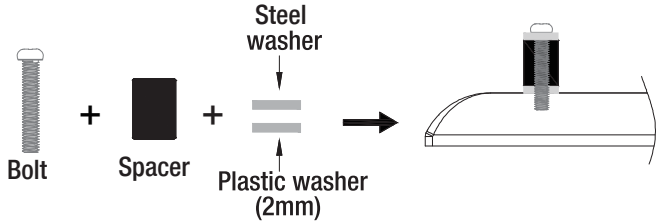 Solution 3 If above solutions do not help, go to the hardware store to buy bolts/ washers to fit the TV holes.

Commercial Electric™

Questions, problems, missing parts? Before returning to the store,
call Commercial Electric Customer Service
8 a.m. - 7 p.m., EST, Monday-Friday, 9 a.m. - 6 p.m., EST, Saturday

1-877-527-0313

HOMEDEPOT.COM

For additional support, call the manufacturer at 1-800-747-6558.

Retain this manual for future use.