February 2026

INSTALLATION INSTRUCTIONS

Coronado
Bathroom Accessories
711 Series

PLEASE READ THESE INSTALLATION INSTRUCTIONS THOROUGHLY PRIOR TO INSTALLING THE 711 SERIES

WE RECOMMEND THIS PRODUCT IS INSTALLED BY QUALIFIED AND TRAINED PERSONNEL

FAILURE TO FOLLOW THESE INSTRUCTIONS COULD LEAD TO IMPROPER INSTALLATION OF THE ACCESSORY, STRUCTURAL AND/OR WATER DAMAGE TO THE WALL AND IN-WALL SUPPORT STRUCTURES, AND/OR SERIOUS BODILY INJURY IN USE. IN ADDITION, ALL WARRANTIES, EXPRESS OR IMPLIED, WILL BE NULL & VOID DUE TO IMPROPER INSTALLATION OF THIS PRODUCT. THE MANUFACTURER DOES NOT ASSUME ANY LIABILITY FOR DAMAGE RESULTING FROM SERVICES PERFORMED BY OTHERS, OR FAULTY INSTALLATION, MISUSE OR MISAPPLICATION OF GOODS.

TO ASSURE PROPER AND SAFE INSTALLATION, THE HARDWARE USED TO MOUNT THESE ACCESSORIES ON THE WALL SHOULD BE APPROPRIATE FOR THE SUBSTRUCTURE AND SURFACE ONTO WHICH THEY ARE INSTALLED.

1. **Locating the accessory in the desired position.**
   Remove the accessory from the shipping carton.

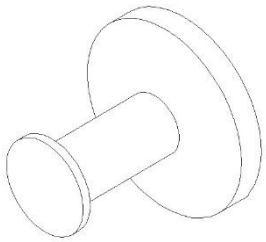

711-40

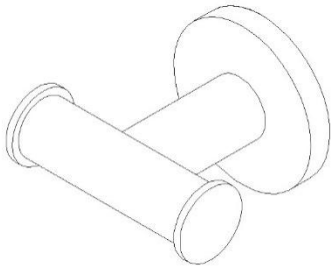

711-41

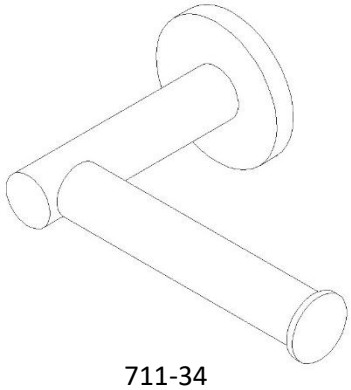

711-34

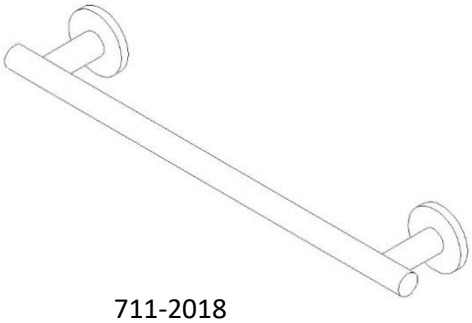

711-2018
711-2024

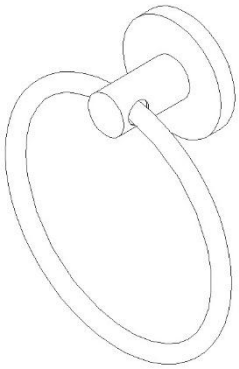

711-46

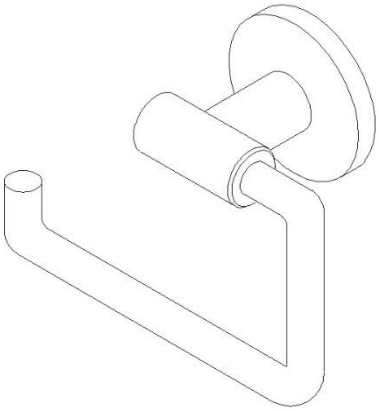

711-35

⚠️ **Warning** ⚠️

If Seachrome products are not installed, operated, and maintained in accordance with the manufacturer's instructions, there is a potential risk of exposure to substances, including nickel, which are known to the State of California to cause cancer, birth defects or reproductive harm. For more information go to www.P65warnings.ca.gov .

Place the accessory in the desired position on the wall. Using a level (not provided) ensure the accessory is level and mark the location of the mounting holes on the wall.

Using a pencil or suitable marker, it is ***extremely important*** you mark the center of each of the mounting holes precisely on the mounting surface.

Proceed cautiously through the following steps in this installation process to avoid drilling into in-wall electrical or water supply lines, and where possible drill through tile – not through grout.

2. Mounting the Accessory.

Step #1
Use a power drill with a carbide tip drill bit (not provided) and drill at the locations marked on the wall, as described above.

Step #2
Apply a bead of silicone around the Mounting Flanges on the mounting surface to ensure that a water-tight seal will be created at all mounting locations. Secure the accessory to the wall using hardware supplied by the manufacturer. *Tighten hardware completely after ALL screws are in place.* Complete the installation by covering the mounting flanges with the Concealed Flange Covers, snapping them into place.

Note: The arm on the #711-35 paper holder is secured in place at the factory with a set screw on the underside of the post. Loosen the set screw to achieve the desired level of movement in the paper holder arm.

To ensure proper and safe installation, the accessory should not shift in any direction on the mounting surface.

Hardware Provided:

711-34, 711-35, 711-40, 711-41, 711-46:	(2) stainless steel sheet metal screws and anchors
711-2018, 711-2024:	(4) stainless steel sheet metal screws and anchors

Tools required: Marking pencil/pen, level, power drill, carbide tip drill bit, phillips driver, silicone, 1/8 allen wrench.

THIS COMPLETES THE INSTALLATION OF THE 711 SERIES ITEMS.

⚠️ **Warning** ⚠️
If Seachrome products are not installed, operated, and maintained in accordance with the manufacturer's instructions, there is a potential risk of exposure to substances, including nickel, which are known to the State of California to cause cancer, birth defects or reproductive harm. For more information go to www.P65warnings.ca.gov .