ELKAY®
SPECIFICATIONS

Gourmet (Lustertone®) Stainless Steel Single Bowl Top Mount Sink
Model(s) LRAD191965

PRODUCT SPECIFICATIONS

Gourmet (Lustertone®) Stainless Steel Single Bowl Top Mount Sink. Overall dimensions are 19-1/2" x 19" x 6-1/2". Sink is manufactured from 18 gauge 304 Stainless Steel with a Lustrous Highlighted Satin finish, Rear Center drain placement and Full spray sides and bottom.

Installation Type:	Top Mount
Material:	304 Stainless Steel
Finish:	Lustrous Highlighted Satin
Gauge:	18
Sound Deadening:	Full spray sides and bottom
Number of Bowls:	1
Sink Dimensions:	19-1/2" x 19" x 6-1/2"
Bowl 1 Dimensions:	16" x 13-1/2" x 6-3/8"
Drain Size:	3-1/2" (89mm)
Drain Location:	Rear Center
Minimum Cabinet Size:	24"
Mounting Hardware:	Part # 64090012 included for countertops up to 3/4" (19mm) thick
Cutout Template #:	1000001259

Template is available for download at elkay.com

Cutout Dimensions for Top Mount Installation:
18-7/8" x 18-3/8" (479mm x 467mm) with 1-1/2" (38mm) corner radius

This sink is compliant to ADA and ANSI/ICC A117.1 accessibility requirements when installed according to the requirements outlined in these standards.

Hole Drilling Configurations:

1-1/2" (38mm) Diameter Faucet Holes on 4" (102mm) Centers

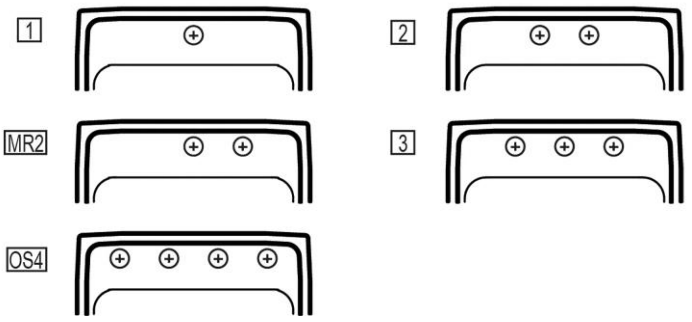



AMERICAN PRIDE. A LIFETIME TRADITION.
Like your family, the Elkay family has values and traditions that endure. For almost a century, Elkay has been a family-owned and operated company, providing thousands of jobs that support our families and communities.

Sinks are listed by IAPMO® as meeting the applicable requirements of the Uniform Plumbing Code®, International Plumbing Code®, and National Plumbing Code of Canada.

Product Compliance: ADA
BUY AMERICAN ACT
ASME A112.19.3/CSA B45.4

Clean and Care Manual (PDF)
Installation Instructions (PDF)
Limited Lifetime Warranty (PDF)

Similar models are available with: Quick-Clip Mounting System, additional ADA depths, CuVerro antimicrobial copper

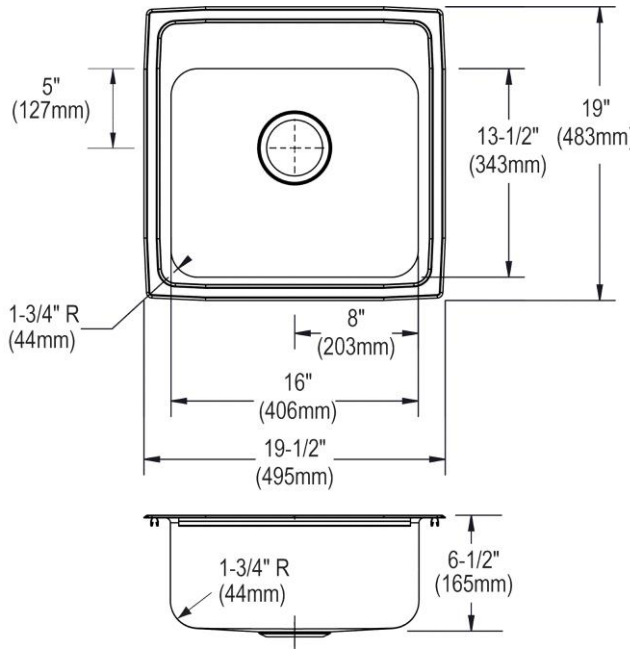

PART:_____QTY: _____
PROJECT:_____
CONTACT:_____
DATE:_____
NOTES:_____
APPROVAL:_____

In keeping with our policy of continuing product improvement, Elkay reserves the right to change product specifications without notice. Please visit elkay.com for the most current version of Elkay product specification sheets. This specification describes an Elkay product with design, quality, and functional benefits to the user. When making a comparison of other producers' offerings, be certain these features are not overlooked.

© 2016

ELKAY®
SPECIFICATIONS

Gourmet (Lustertone®) Stainless Steel Single Bowl Top Mount Sink
Model(s) LRAD191965

Installation Profile:

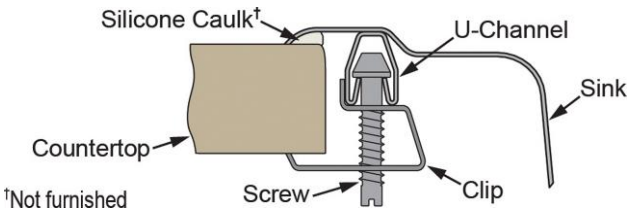

OPTIONAL ACCESSORIES

Cutting Board:	CB1613, CB1713, CBR1316, CBS1316
Drain:	LK99, LKAD35
Faucet:	LKGT1041, LKGT2041
Hardware:	LK364, LK463
Rinsing Basket:	LKWRB1316SS, LKWERBSS
Sinkmate:	LKSM17, LKSMHOOK, LKSMSPONGE, LKSMHSL
Soap Dispenser:	LKGT1054

In keeping with our policy of continuing product improvement, Elkay reserves the right to change product specifications without notice. Please visit elkay.com for the most current version of Elkay product specification sheets. This specification describes an Elkay product with design, quality, and functional benefits to the user. When making a comparison of other producers' offerings, be certain these features are not overlooked.

© 2016