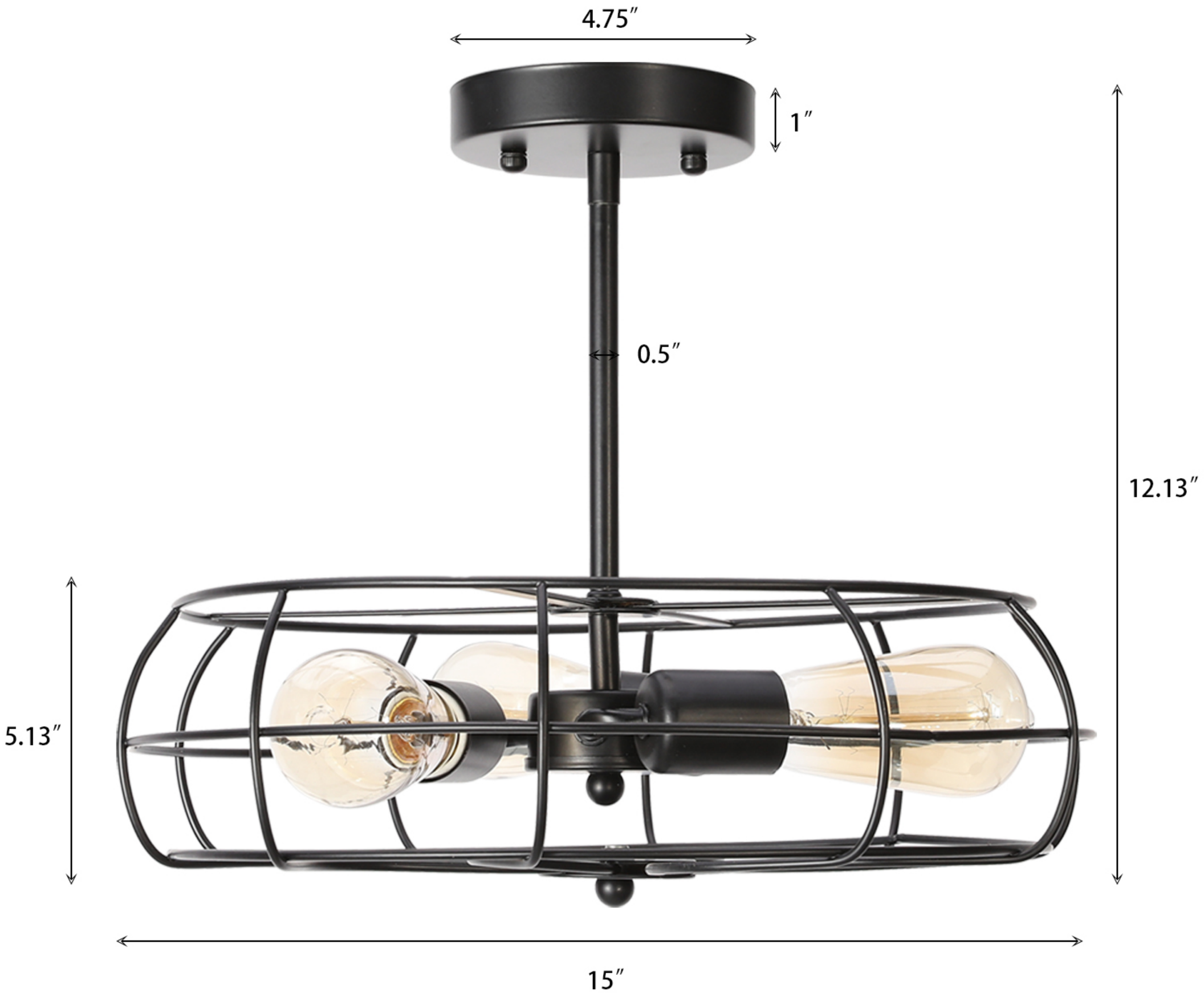
4.75″
1″
0.5″
12.13″
5.13″
15″