# K-11830

## Touchless round hybrid valve and sensor kit

### Features

- Required for Purist® and Falling Water® wall-mount touchless faucets
- Insight™ adaptive infrared technology
- 0.5 gpm (1.9 lpm) maximum flow rate
- 30 second maximum cycle time
- Ideal for use with KOHLER vessels
- Includes one 3.6V size C Hybrid energy cell
- Low-lead (SDWA) compliant



DISCONTINUED



1-800-4KOHLER (1-800-456-4537)
Kohler Co. reserves the right to make revisions without notice to product specifications.
For the most current specification sheet, go to www.kohler.com USA or www.kohler.ca Canada.
4-23-2026 21:0 - US-CA

THE BOLD LOOK OF KOHLER®

## Codes/Standards

***ADA, OBC, CSA B651 compliant when installed to the specific requirements of these regulations.***

ADA | CSA B651 | OBC

ASME A112.18.1/CSA B125.1
NSF/ANSI/CAN 372
ADA
ICC/ANSI A117.1
CSA B651
OBC

## Material

- Brass

## Warranty

***See website for detailed warranty information.***

KOHLER® Faucet Lifetime Limited Warranty

DISCONTINUED



1-800-4KOHLER (1-800-456-4537)
Kohler Co. reserves the right to make revisions without notice to product specifications.
For the most current specification sheet, go to www.kohler.com USA or www.kohler.ca Canada.
4-23-2026 21:0 - US-CA

THE BOLD LOOK OF KOHLER.

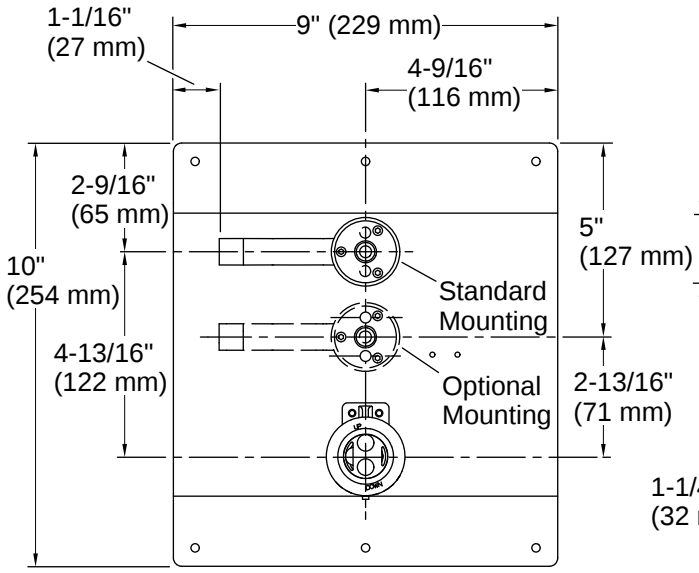


Valve Mounting Plate

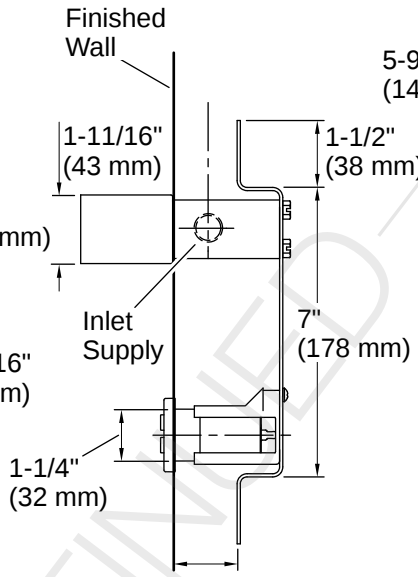


Sensor Roughing-in
1-5/8" (41 mm) Min
3-1/8" (79 mm) Max

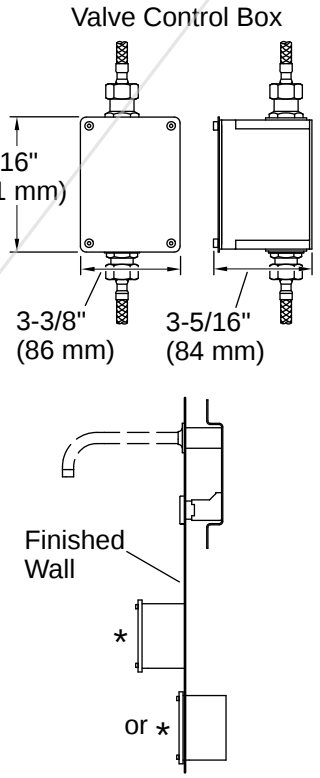


*Valve Control Box
Mounting Options

## Installation

- Optional spout-mounting location
- Easy installation. Hybrid battery powered.It does not require AC connection

## Installation Notes

***Install this product according to the installation instructions.***

Reference the installation instructions for specific framing information.
Standard mounting for use with faucet trim: K-T11836, K-T11839, K-T11840, and K-T11841.
Standard or Optional mounting for use with faucet trim: K-T11837 and K-T11838.
ADA, OBC, CSA B651 compliant when installed to the specific requirements of these regulations.

DISCONTINUED



1-800-4KOHLER (1-800-456-4537)
Kohler Co. reserves the right to make revisions without notice to product specifications.
For the most current specification sheet, go to www.kohler.com USA or www.kohler.ca Canada.
4-23-2026 21:0 - US-CA

THE BOLD LOOK OF KOHLER.