Sinks Drains & Traps installation instructions

Before You Start Installation

We recommend that you consult with a professional if you are unfamiliar with installing this type of product. WS Bath Collections accepts no liability for any damage to the property; floor, walls, pluming, sink, or personal injury during installation.

Follow all local plumbing and building codes.

Getting Started

Insure that you have all the requires materials and tools for the installation.

Installation

1. Insert the drain as shown in picture, tighten the drain nut from underneath of the sink. Make sure not to over tighten to avoid sinks chips and cracks.
2. Insert trap horizontal pipe to waste opening to wall.
3. Attach vertical pipe/ trap to drain tail piece and hand tighten together.
4. Align vertical pipe/ trap with trap horizontal pipe. Cut part of the horizontal pipe as necessary to obtain the proper alignment.
5. Tighten trap horizontal pipe to wall. Tighten waste cover
6. Check for leakage by opening faucet and letting water run for at least 45 seconds.

Sinks Drains & Traps installation instructions

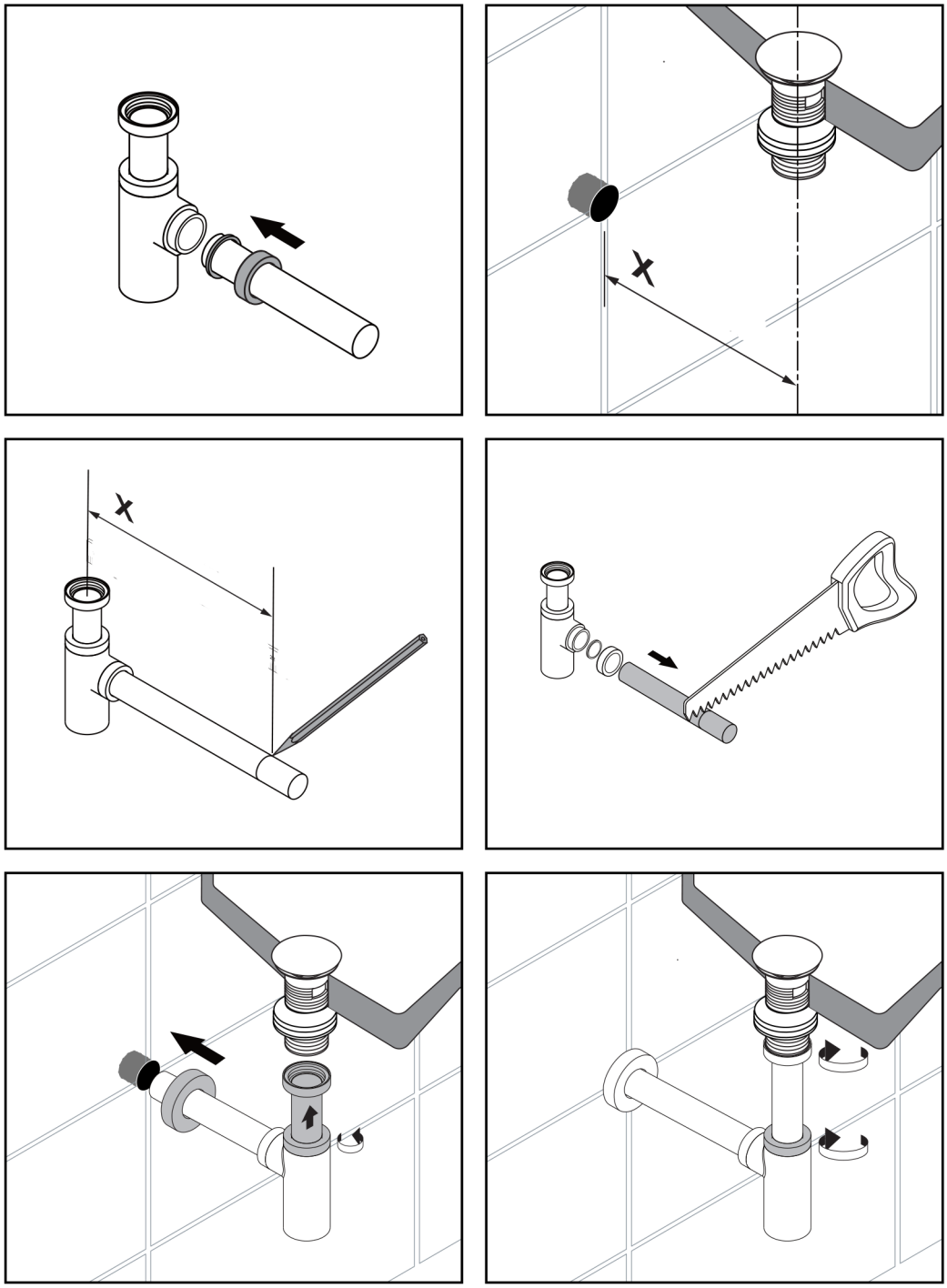

Installation Instructions	**Model | Sinks Drains & Traps**	Dimensions Metric *1 inch = 2.54 cm* *1 inch = 25.4 mm*	WS® BATH COLLECTIONS 1051 Lea Drive - Collegeville, PA 19426 Tel. 215 513 9400 - Fax 610 831 0215 www.wsbathcollections.com - info@wsbathcollections.com

Sinks Drains & Traps installation instructions

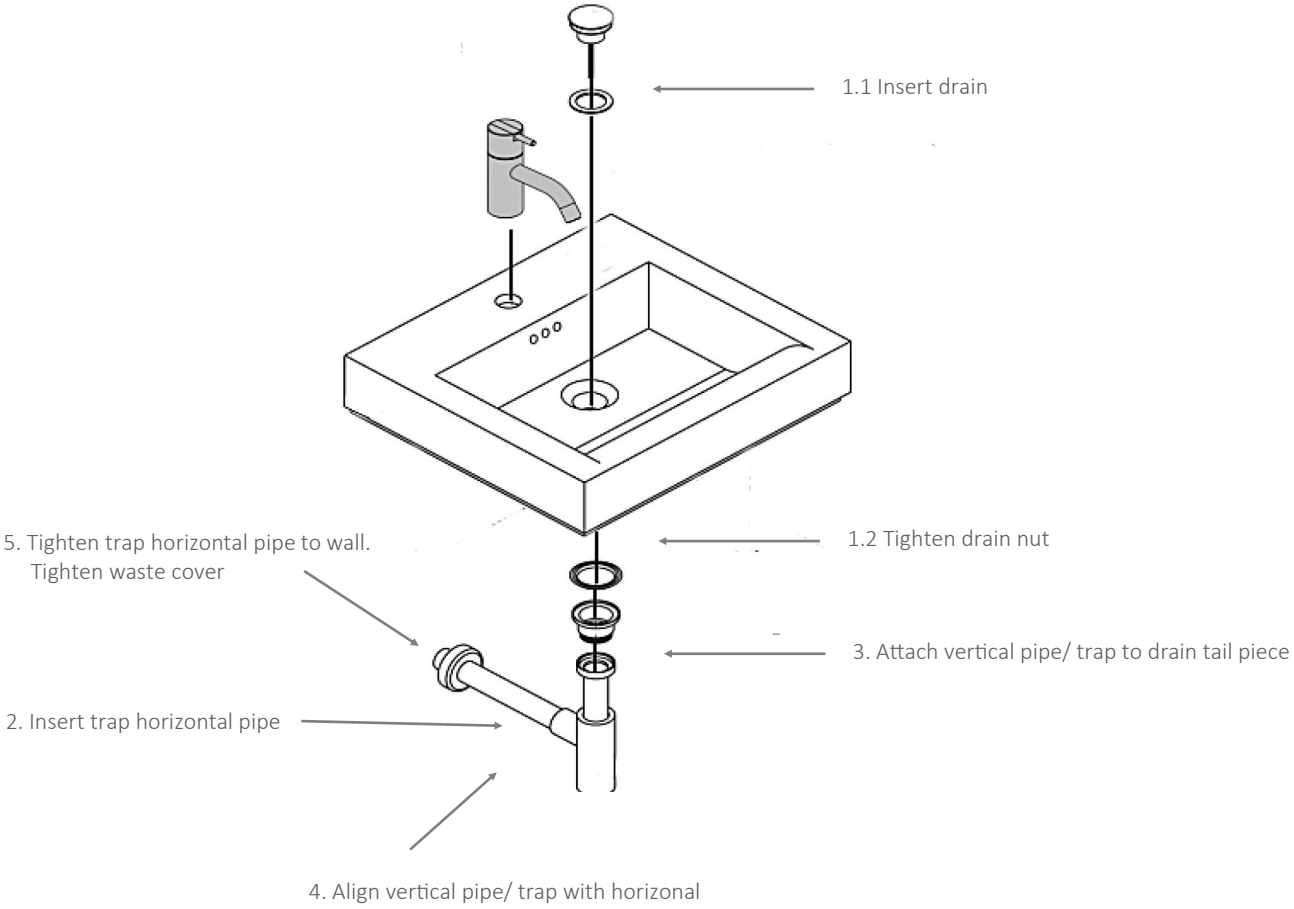

Installation Instructions	**Model | Sinks Drains & Traps**	Dimensions Metric *1 inch = 2.54 cm* *1 inch = 25.4 mm*	WS® BATH COLLECTIONS 1051 Lea Drive - Collegeville, PA 19426 Tel. 215 513 9400 - Fax 610 831 0215 www.wsbathcollections.com - info@wsbathcollections.com