Item # 1009 647 952
Model # LT11a65KIT400

USE AND CARE GUIDE

HUBSPACE KIT- A19 SMART BULB, 6.5FT SMART RGBIC TUNABLE WHITE STRIP LIGHT, SMART PLUG

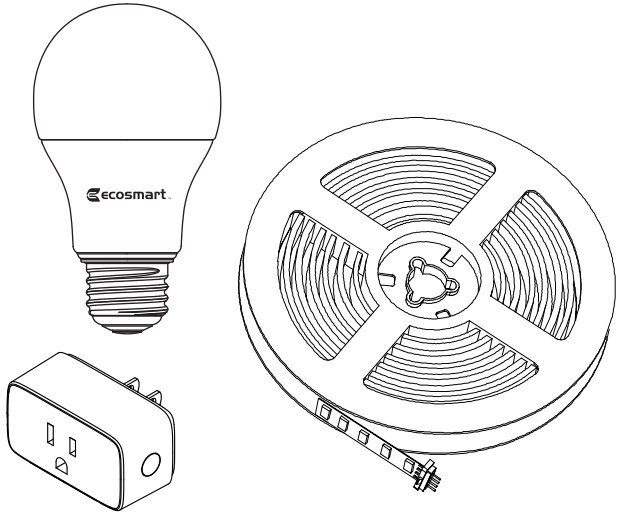

Questions, problems, missing parts? Before returning to the store, call Hubspace Customer Service
8 a.m. - 7 p.m., EST, Monday - Friday, 9 a.m. - 6 p.m., EST, Saturday

1-877-592-5233

HOMEDEPOT.COM/Hubspace

Wi Fi® CERTIFIED

Bluetooth®

THANK YOU

We appreciate the trust and confidence you have placed in EcoSmart through the purchase of this kit. We strive to continually create quality products designed to enhance your home. Visit us online to see our full line of products available for your home improvement needs. Thank you for choosing EcoSmart!

Safety Information

WARNING: Only use the control provided with or specified by these instructions to control this lamp. This lamp will not operate properly when connected to a standard (incandescent) dimmer or dimming control.

WARNING: Not for use in totally enclosed fixtures.

WARNING: For indoor use only. Do not use where directly exposed to water.

WARNING: This device is not intended for use with emergency exits.

CAUTION: Risk of Shock-Turn off power before inspection, installation, or removal. Do not open. There are no user serviceable parts inside.

Wireless Protocol

The Wi-Fi CERTIFIED™ Logo is a registered trademark of Wi-Fi Alliance®.

The Bluetooth word mark and logos are registered trademarks owned by Bluetooth SIG, Inc. and any use of such marks by The Home Depot is under license. Other trademarks and trade names are those of their respective owners.

Apple and the Apple logos are trademarks of Apple, Inc., registered in the U.S., and other countries. App Store is a service mark of Apple Inc.
Google, Google Play and the Google Play logo are trademarks of Google LLC.

Wi Fi® CERTIFIED

Bluetooth®

Warranty

FIVE-YEAR LIMITED WARRANTY

Limited Warranty: Guaranteed to last 5 years based on 3 hours use per day, 7 days per week. If this bulb does not last 5 years after date of purchase (based on 3 hours per day / 7 days per week) due to a defect in materials or workmanship, please bring the defective bulb and a receipt indicating proof of purchase to any Home Depot store. The Home Depot will provide a replacement or, at our discretion, a store credit for the value of the original purchase price. This warranty will be voided for misuse of product per the caution statement. Some states do not allow the exclusion of limitation or consequential damages, so the above exclusion may not apply to you. This warranty gives you specific legal rights and you may also have other rights that vary from state to state and province to province. Please see a store for more details.

FCC Regulation

Supplier's Declaration of Conformity
47 CFR § 2.1077 Compliance Information
Unique Identifier: 12A19060WRGBWH1

Responsible Party
Leedarson America, Inc.
300 Technology Court SE Suite 100; Smyrna, GA 30082
1-678-293-8382

FCC ID: 2AB2Q-12A800STQT

This device complies with Part 15 of the FCC Rules. Operation is subject to the following two conditions: (1) this device may not cause harmful interference, and (2) this device must accept any interference received, including interference that may cause undesired operation. This equipment, if not installed and used in accordance with the instructions, may cause harmful interference to radio communications. Any changes or modifications not expressly approved by the manufacturer could void the user's authority to operate the equipment.
NOTE: This equipment has been tested and found to comply with the limits for a Class B digital device, pursuant to Part 15 of the FCC Rules. These limits are designed to provide reasonable protection against harmful interference in a residential installation. This equipment generates, uses and can radiate radio frequency energy and, if not installed and used in accordance with the instructions, may cause harmful interference to radio communications. However, there is no guarantee that interference will not occur in a particular installation. If this equipment does cause harmful interference to radio or television reception, which can be determined by turning the equipment off and on, the user is encouraged to try to correct the interference by one or more of the following measures: reorient or relocate the receiving antenna; increase the separation between the equipment and receiver; connect the equipment into an outlet on a circuit different from that to which the receiver is connected; consult the dealer or an experienced radio/TV technician for help.

This equipment complies with FCC radiation exposure limits set forth for an uncontrolled environment. This equipment should be installed and operated with minimum distance of 20 cm between the radiator and your body.

Pre-Installation

Package Contents

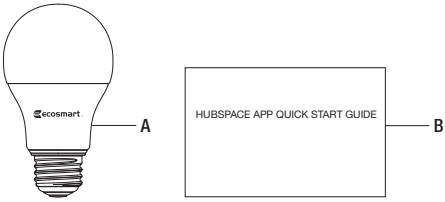

Part	Description	Quantity
A	A19 LED Bulb	1
B	Quick Start Guide	1

Bulb Specification

Model	Input Volts (AC)	Input Frequency (Hz)	Input Watts (W)	Lumens (LM)	Efficacy (LM/W)	CRI
12A19060WRGBWH1	120	60	8.5	800	94	90

Please contact 1-877-592-5233 for further assistance.

Operation

1 **Download the Hubspace™ app from the App Store or the Google Play Store.**

Download on the App Store

GET IT ON Google Play

2 **Sign in, or tap Register to create a Hubspace account.**

3 **To add your bulb, tap the '+' button in the upper-right corner.**

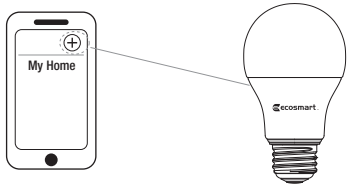

NOTE:
- Bluetooth access is required for product setup.
- Each smart Hubspace bulb must be set individually by scanning the QR code or by following instruction in the app for manual set up.
- Scanning the QR code is the fastest method for set up.

4 **Scan the QR code printed on either the bulb or Quick Start Guide.**

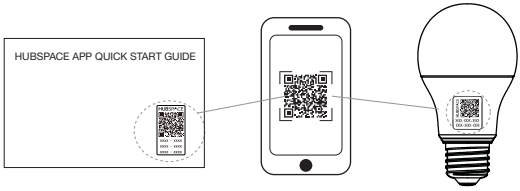

NOTE:
- If the QR code cannot be scanned, you can enter the code manually. Tap Enter Code and follow the instructions.
- If you are unable to access the QR code, on the Scan Product screen, tap the Search button in the lower-right corner and follow the instructions.
- If you cannot locate the QR code or are having trouble scanning the QR code, please follow instructions for manual set up.

Operation (continued)

5 Connect your bulb to power and follow the instructions on app screen.

NOTE:
- This Hubspace bulb requires a 2.4GHz Wi-Fi network, which most routers provide.
- The Hubspace app will only show Wi-Fi networks compatible with this bulb.
- If you do not see your Wi-Fi network name when you attempt to connect your bulb, please check your router settings or move your product closer to your Wi-Fi router.

6 Control your lighting using the Hubspace app

- Control dimming: Set fade times and sensor modes.
- Change colors: Select from shades of white or full color spectrum.
- Create schedules: Set up specific times when a connected bulb will turn on and off.
- Group products: Turn on/off groups of bulbs at the same time.

7 Set up your Voice Assistant

You can connect your smart bulb to Google Assistant and Alexa from the Hubspace app. Or, you can sign in to Alexa app or Google Assistant and connect to your Hubspace products from there.

Manual Set Up Instructions

1. Power on the bulb.
2. Tap the + button in the upper right corner to add your bulb.
3. Tap the search button in the lower right hand corner.
   - Search button is next to text “QR code not available?”
4. On next screen select the option “ My product has no buttons”.
5. Turn the light bulb on and off slowly 5 times in a row.
   - Bulb will start flashing when it has been discovered by the app.
   - When bulb is ready for set up, a red bar will appear at the top stating “one product available for set up.” Tap the red bar.
6. Add the product to the app.
7. Follow the instructions to the app.

Troubleshooting Guide

Problem	Solution
My Hubspace product is not connecting to Wi-Fi.	Make sure your product is connected to a power source. Your internet connection or Wi-Fi network may be down.
My product cannot find any Wi-Fi networks.	Make sure you have a 2.4GHz capable Wi-Fi network within range of the product you are trying to add.
My product is in a location that does not have Wi-Fi. Can I still use it with the Hubspace app?	Yes. Use the app on a phone with an internet connection like LTE. The phone must be within Bluetooth range of your Hubspace product.
I cannot find the QR code.	It is on the bulb housing. A copy of the QR code is also included in your product's documentation.
The QR code has become damaged. How do I add the product?	Under the QR code are numbers. You can enter those in manually instead of scanning the code.
I lost my QR code. How do I add a product?	Make sure the product is connected to power. In the Hubspace app, tap +, then Add Product. On the Scan Product screen, tap the Search button in the lower-right corner. Follow the instructions on-screen.
A product is on another account. How do I transfer it?	Scan the QR code and it will transfer to your account.
My product is offline for long periods of time.	Make sure your Wi-Fi signal strength is sufficient. You may need to move your router, use mesh Wi-Fi, or Wi-Fi extenders.
The product is on and I scanned the QR code, but the app cannot connect to it.	Turn off Bluetooth on your phone and turn it back on. Then, scan the QR code. If the problem persists, turn your phone off and on, then try again.
Can I scan the same QR code to add multiple products?	No. Each product has a unique QR code.

6.5FT SMART RGBIC TUNABLE WHITE STRIP LIGHT

Pre-Installation

Package Contents

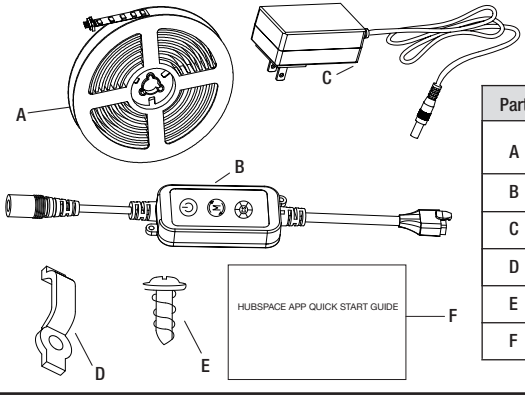

Part	Description	Quantity
A	Strip Light with Adhesive Backing	1
B	Inline Controller	1
C	Plug-in Power Supply	1
D	Mounting Clips	4
E	Screws	4
F	Hubspace App Quick Start Guide	1

Safety Information

IMPORTANT SAFETY INSTRUCTIONS Read All Instructions (SAVE THESE INSTRUCTIONS)

WARNING: Do not connect more than 32.8 feet (5 pieces) of tape light strip to this single adaptor.

WARNING: Do not submerge the flexible light in liquids or use the product in the vicinity of standing water or other liquids.

WARNING: Do not secure this product with staples, nails, or other sharp objects that may damage the insulation.

CAUTION: To avoid possible fire, product damage, or early lamp failure, this tape light should not be used in heat-producing appliances.

CAUTION: Do not operate light strip while coiled.

WARNING: Do not use if there is any damage to the light or cord insulation. Inspect periodically.

WARNING: Do not cover this product as the covering may cause the flexible light to overheat and either melt or ignite.

CAUTION: Do not route the cord or flexible light cable through walls, doors, windows, or any similar part of a building structure.

CAUTION: Do not subject flexible lighting to continuous flexing.

CAUTION: Do not install near or around flammable or corrosive materials.

CAUTION: This product is rated for indoor, damp locations only.

FCC Compliance Statement
This device complies with part 15 of the FCC Rules. Operation is subject to the following two conditions:
1. This device may not cause harmful interference, and
2. This device must accept any interference received, including interference that may cause undesired operation.
FCC WARNING
This equipment has been tested and found to comply with the limits for a Class B digital device, pursuant to Part 15 of the FCC Rules. These limits are designed to provide reasonable protection against harmful interference in a residential installation. This equipment generates, uses and can radiate radio frequency energy and, if not installed and used in accordance with the instructions, may cause harmful interference to radio communications. However, there is no guarantee that interference will not occur in a pártícular installation. If this equipment does cause harmful interference to radio or television reception, which can be determined by turning the equipment off and on, the user is encouraged to try to correct the interference by one or more of the following measures:
• Reorient or relocate the receiving antenna.
• Increase the separation between the equipment and the receiver.
• Connect the equipment into an outlet different from that to which the receiver is connected.
• Consult the dealer or an experienced radio/TV technician for help.
Any changes or modifications not expressly approved by the party responsible for compliance could void the user's authority to operate the equipment.

FCC Responsible Party: American Lighting Inc.
Address: 11775 E.45th Ave. Denver, CO 80239
Telephone Number: 1 800 880 1180

Warranty

2-YEARS LIMITED WARRANTY

The manufacturer warrants this lighting fixture against defects in materials and workmanship for a period of two years from the date of purchase. If within this period the product is found to be defective in material or workmanship, the product must be returned, with a copy of the bill of sale as proof of purchase, to the original place of purchase. The manufacturer will, at its option, repair, replace, or refund the purchase price to the original purchaser or consumer. This warranty does not cover light bulbs or the fixture becoming damaged due to misuse, accidental damage, improper handling and/or installation, and specifically excludes liability for direct, incidental, or consequential damages. As some states do not allow exclusions or limitation on an implied warranty, so the above exclusions and limitations may not apply. This warranty gives you specific rights and you may also have other rights that vary from state to state.
Contact the Customer Service Team at 1(877)592-5233 or visit WWW.HOMEDPOT.COM/HUBSPACE.

Installation

Layout Considerations

- □ Determine the desired location and length of the LED light strip needed for installation. If any cuts are need, follow "preparing the light strip" below.
- □ Lightly mark the beginning of run where the Inline Controller (B) and Plug-in Power Supply (C) will connect to the tape. Make sure there is adequate room for the Strip Light with Adhesive Backing (A), Inline Controller (B), and Plug-in Power Supply (C) in this space and that the Plug-in Power Supply (C) can reach an appropriate power receptacle without being pulled tightly.
- □ Ensure surface is sturdy and mechanically sound.

1 Installing the light strip

- □ Clean the location in which the Strip Light with Adhesive Backing (A) is to be mounted to make sure it is free from dirt, dust, and oil, or anything that will inhibit the adhesive from making solid contact with the mounting surface.
- □ Peel off the adhesive backing on the Strip Light with Adhesive Backing (A), adn secure the Strip Light with Adhesive Backing (A) to the desired location by pressing firmly for 30 seconds.
- □ Place the mounting clip (D) over the light strip and secure with mounting screws (E).

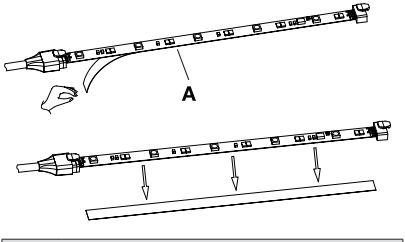

CAUTION: To avoid damage to the light strip, do not twist the light strip or bend past the bend radius of 60 degrees.

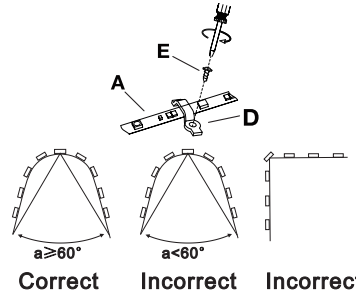

2 Linking the light strip

- □ 5x 6.5ft. lengths of light string can be linked together. Do not attempt to connect more than 32.8 ft. to one power adaptor.
- □ Connect the terminal end from the output of the first tape light strip to the 5-pin start of the next tape light strip.

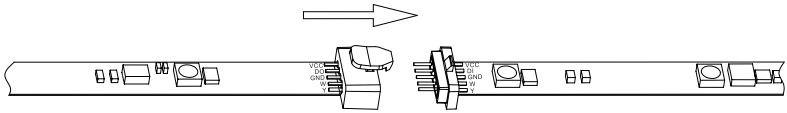

3 Installing the controller cable

- □ Connect the terminal cable from the output of the Inline Controller (B) to the 5-pin end of the light strip.
- □ Plug the 24V DC Plug-in Power Supply (C) into an appropriate 120V power outlet.

CAUTION: This LED product is designed to be used only with the 24V DC power adaptor included with the kit. Do not operate with any other power supply type. Disconnect power at the source prior to attempting installation.

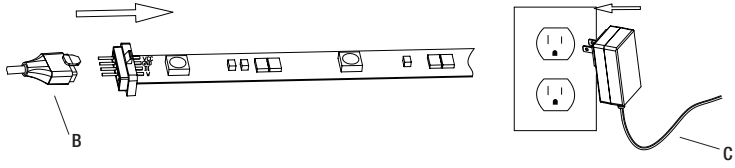

4 Using strip light connectors

The Strip Light with Adhesive Backing (A) can be cut to a desired length; however, it can only be cut where marked with vertical line, approximately every 9.8inches. Do not cut eht silver color solder marks; only in the center of the copper pads as shown. To adjust the length, use the following steps:

- □ Locate the cuttable locations on the Strip Light with Adhesive Backing (A), starting from the end that has the power supply wire attached.
- □ Choose the location to be cut that best suits the length of strip light needed to illuminate the desired area.
- □ Using sharp scissors, cut directly through the center of the cut line. Be sure not to cut off the connection at the start of the tape.

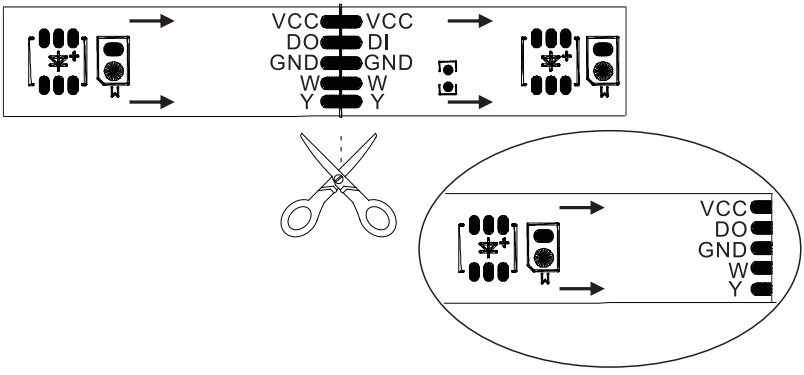

Please contact 1-877-592-5233 for further assistance.

Connect the Smart Device

1 Let's Get Started!

- □ Download the **Hubspace™** app from the App Store or the Google Play Store to your mobile device.
- □ Launch the app.
- □ To register, enter your email address and a password. Or, log-in if you already.
- □ Bluetooth access is required for device setup.

2 Verify Your Network

- □ This **Hubspace™** device requires a 2.4GHz Wi-Fi channel.
- □ Most routers provide a 2.4GHz Wi-Fi channel.
- □ **Hubspace™** only shows Wi-Fi networks that your device can use.
- □ If you do not see your Wi-Fi netowrk name when you attempt to connect your device, please check your router settings.

3 AddaDevice

- □ In the **Hubspace™** app, tap the plus sign in the upper right corner.
- □ Scan your product's QR code. You can find a copy of the QR code on the device itself and in the Quick Start Guide.
  i. Scan problem?
  ii. If the QR code cannot be scanned for some reason, you can enter the code manually. Tap **Enter Code** and follow the instructions.
- □ Connect your device to power and follow the instructions on screen.
- □ If you are unable to access the QR code for your light, you can put it into discovery mode with the following sequence:
  Switch the device OFF and ON 5 times. The light will pulse to show that it can now be discovered. In the **Hubspace™** app, tap the plus sign in the upper right corner and follow the instructions to discover devices. More than one device can be added at a time using this method.

4 Set up Your Voice Assistant

- □ In the **Hubspace™** app, tap the Hubspace button.
- □ Select the Integrations tab, choose your voice assistant and follow the instructions.

Operation

When light is turned OFF, the Inline Controller (B) will remember the last setting.
Connection schematic diagram.

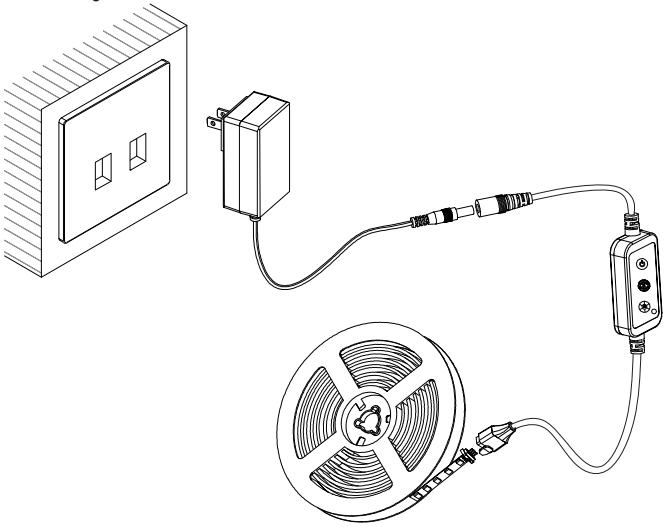

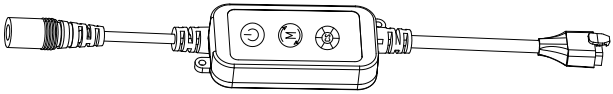

Turn on/ Turn off Tape Light(Turn ON: last status)

Functions options

Color Selection: 8-color Mix

Please contact 1-877-592-5233 for further assistance.

Troubleshooting

Problem	Solution
The tape light does not turn on.	☐ Ensure the power adaptor is plugged into a live 120V receptacle. ☐ Check the connections and make sure the power adaptor wire is securely connected to the copper connections of the tape light. ☐ Check to make sure the plastic tab has been removed from the battery compartment on the back of the handheld remote control. Check to make sure the polarity of the batteries is correct. Check to make sure the batteries are not dead.
My Hubspace device is not connecting to Wi-Fi.	☐ Make sure your device is connected to a power source. ☐ Your Internet connection or Wi-Fi network may be down. Check your router and internet connection.
My device cannot find any Wi-Fi networks.	☐ Make sure you have a 2.4GHz capable Wi-Fi network within range of the device you are trying to add.
My device is in a location that does not have Wi-Fi. Can I still use it with the Hubspace app?	☐ Yes: - Use the app on a phone with an Internet connection like LTE. - The phone must be within Bluetooth range of your Hubspace device .
I cannot find the QR code.	☐ It is on the plug adaptor. A copy of the QR code is also included in your device's documentation.
The QR code has become damaged. How do I add the device?	☐ Under the QR code are numbers. You can enter those numbers manually instead of scanning the code.
A device is on another account. How do I transfer it?	☐ Scan the QR code and it will transfer to your account.
My device is offline for long periods of time.	☐ Make sure your Wi-Fi signal strength is sufficient. You may need to move your router, use mesh Wi-Fi, or Wi-Fi extenders.
The device is on an I scanned the QR code, but the app cannot connect to it.	☐ Turn off Bluetooth on your phone and turn it back on. Then, scan the QR code.
Can I scan the same QR code to add multiple products?	☐ No. Each product has a unique QR code.

Care and Cleaning

- ☐ Before attempting to clean the light strip, unplug the adaptor from the power outlet.
- ☐ To clean the light strip, use a clean, dry, or slightly damp cloth.
- ☐ Do not use any cleaners with chemicals, solvents, or harsh abrasives, as damage to the light strip may occur.
- ☐ Allow the light strip and components to dry thoroughly before plugging the power adaptor back into the outlet.

Safety Information

WARNING: For indoor use only. Do not use in wet locations. The total current limit of the device is 15Amp. To avoid damage, Do not exceed the 15 Amps limit. If a direct short is created on the output, the Smart Plug will be damaged and no longer function. Do not disassemble the product or make repairs yourself. You run the risk of electric shock and voiding the limited warranty. If you need service, please contact the after sales services.

Make sure to use this product together with 15A circuit breaker in the upstream.

FCC Regulation

Supplier's Declaration of Conformity

47 CFR § 2.1077 Compliance Information

Responsible Party

Leedarson America, Inc. 300 Technology Court SE Suite 100; Smyrna, GA 30082 1-678-293-8382

Unique Identifier: HPPA11AWB

Contains FCC ID: 2AB2Q-LA02301

This equipment complies with FCC radiation exposure limits set forth for an uncontrolled environment. This equipment should be installed and operated with a minimum distance of 20cm between the radiator and any part of your body.

This device complies with Part 15 of the FCC Rules. Operation is subject to the following two conditions:
(1) this device may not cause harmful interference, and (2) this device must accept any interference received, including interference that may cause undesired operation.

Caution: The user is cautioned that changes or modifications not expressly approved by the party responsible for compliance could void the user's authority to operate the equipment.

Note: This equipment has been tested and found to comply with the limits for a Class B digital device, pursuant to part 15 of the FCC Rules. These limits are designed to provide reasonable protection against harmful interference in a residential installation. This equipment generates uses and can radiate radio frequency energy and, if not installed and used in accordance with the instructions, may cause harmful interference to radio communications. However, there is no guarantee that interference will not occur in a particular installation. If this equipment does cause harmful interference to radio or television reception, which can be determined by turning the equipment off and on, the user is encouraged to try to correct the interference by one or more of the following measures:

—Reorient or relocate the receiving antenna.
—Increase the separation between the equipment and receiver.
—Connect the equipment into an outlet on a circuit different from that to which the receiver is connected.
—Consult the dealer or an experienced radio/TV technician for help.

Wireless Protocol

The Wi-Fi CERTIFIED™ Logo is a certification mark of Wi-Fi Alliance®. Apple and the Apple logos are trademarks of Apple, Inc., registered in the U.S., and other countries. App Store is a service mark of Apple Inc. Google, Google Play and the Google Play logo are trademarks of Google LLC.

Warranty

1 YEAR LIMITED WARRANTY

This product is guaranteed to be free of defects in materials and workmanship for 1 year from the date of purchase. Guarantee does not include normal wear and tear, bulbs or batteries.

Intertek
5003280

Package Contents

Part	Description
a	Power Socket
b	Indicator Light
c	Power Button

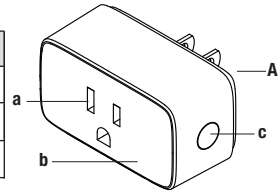



Part	Description	Quantity
A	Smart Plug	1
B	Quick Start Guide	1

Installation

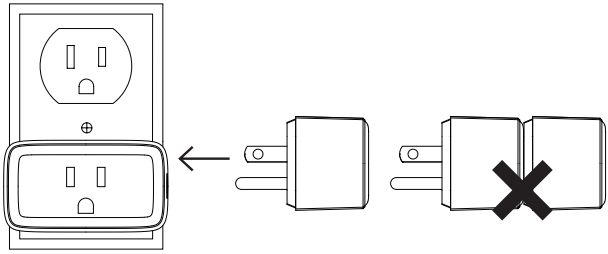

Insert the Smart Plug into a wall socket

Do not insert plugs in a row

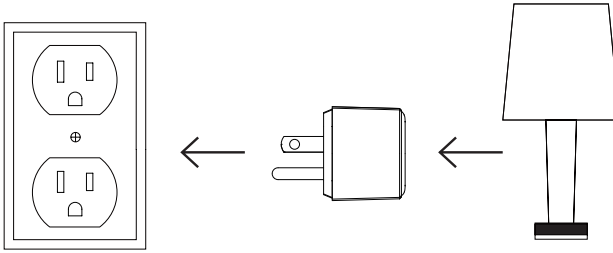

Insert the plug into the socket. The plug is now ready to use

You can now plug in the desired electrical appliance

Operation

1 **Download the Hubspace™ app from the App Store or the Google Play Store.**

Download on the App Store

GET IT ON Google Play

2 **Create an account to sign in or login if you already have an account.**

3 **Connect your plug to power and follow the instructions on app screen.**

NOTE:
- This Hubspace device requires a 2.4GHz Wi-Fi channel. Hubspace only shows Wi-Fi networks that your device can use.
- If you do not see your Wi-Fi network name when you attempt to connect your devices, please check your router settings or move your product closer to your Wi-Fi router.

4 **Tap '+' button in the upper right corner to add your plug.**

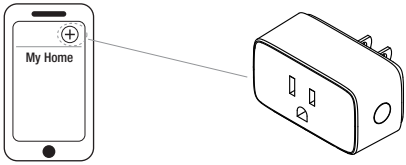

NOTE: Bluetooth access is required for device setup.

5 **Scan the QR code on the plug or in the Quick Start Guide.**



NOTE: If the QR code cannot be scanned, you can enter the code manually. Tap Enter Code and followthe instructions.

6 Using your Smart Plug

- □ Turn your Smart Plug on or off from the Home page on the Hubspace app.
- □ To set a schedule or timer, tap the name of the smart plug on the Home page. You will see options for setting Schedules and Auto-Off Timers.

7 Set up your Voice Assistant

You can connect your smart plug to Google Home and Alexa from the Hubspace app. Or, you can sign in to Alexa app or Google Home and connect to your Hubspace devices from there.

Specification

LED Indicator

LED State	Plug State	Meaning	Action To Takea
Orange Quick Blink	Off	Wi-Fi is not connected	Set up Wi-Fi for the product. If you have already set up Wi-Fi for this product, wait for it to connect. Check the Hubspace app for connectivity status.
Orange/Green Quick Blink	On		
Off	Off	The plug is off.	No action required.
Green	On	The plug is on.	
Red	Off	There is a WiFi error.	Go to the device settings in the app and setup WiFi again. Check that your WiFi Access Point is allowing the device to join the networ k.
Orange	On		

Input	120VAC, 60Hz, FCC, ETL
Output	120VAC, 60Hz,15A Maximum load, Resistive
Network Wireless Type	2.4GHz, IEEE 802.11b/g/n
Operating Temperature	32°–104° F
Operating Humidity	5-85% RH, Non-condensing
Certification	FCC, ETL

Troubleshooting

Problem	Solution
What devices can be controlled with the Smart Plug?	You can control any small appliances (less than max load 1800W) in accordance with the Smart Plug's specifications.
My Hubspace device is not connecting to Wi-Fi.	Make sure your device is connected to a power source. Your Internet connection or Wi-Fi network may be down.
My device cannot find any Wi-Fi networks.	Make sure your device is connected to a power source. Your Internet connection or Wi-Fi network may be down.
My device is in a location that does not have Wi-Fi. Can I still use it with the Hubspace app?	Yes. Use the app on a phone with an Internet connection like LTE. The phone must be within Bluetooth range of your Hubspace device and have Bluetooth enabled.
I cannot find the QR code.	It is on the plug housing. A copy of the QR code is also included in your device's documentation.
The QR code has become damaged. How do I add the device?	Under the QR code are numbers. You can enter those in manually instead of scanning the code.
The QR code has become damaged. How do I add the device?	Scan the QR code and it will transfer to your account.
My device is offline for long periods of time.	Make sure your Wi-Fi signal strength is sufficient. You may need to move your router, use mesh Wi-Fi, or Wi-Fi extenders.
The device is on and I scanned the QR code, but the app cannot connect to it.	Turn off Bluetooth on your phone and turn it back on. Then, scan the QR code. If the problem persists, turn your phone off and on, then try again.
Can I scan the same QR code to add multiple products?	No. Each product has a unique Q R code.



Questions, problems, missing parts? Before returning to the store,
call Hubspace Customer Service
8 a.m. - 7 p.m., EST, Monday - Friday, 9 a.m. - 6 p.m., EST, Saturday

1-877-592-5233

HOMEDEPOT.COM/Hubspace

Retain this manual for future use.