Typical Installation

The ducting from this fan to the outside of the building has a strong effect on the air flow, noise and energy use of the fan.
Use the shortest, straightest duct routing possible for best performance, and avoid installing the fan with smaller ducts than recommended. Insulation around the ducts can reduce energy loss and inhibit mold growth. Fans installed with existing ducts may not achieve their rated air flow.

NOTE: When installing ventilation ducts and air vents, ensure that the air vents are not directly exposed to rain, and install appropriate protective measures around the air vents, such as rain cover or waterproof cover, to reduce the possibility of rainwater directly entering the ventilation ducts.

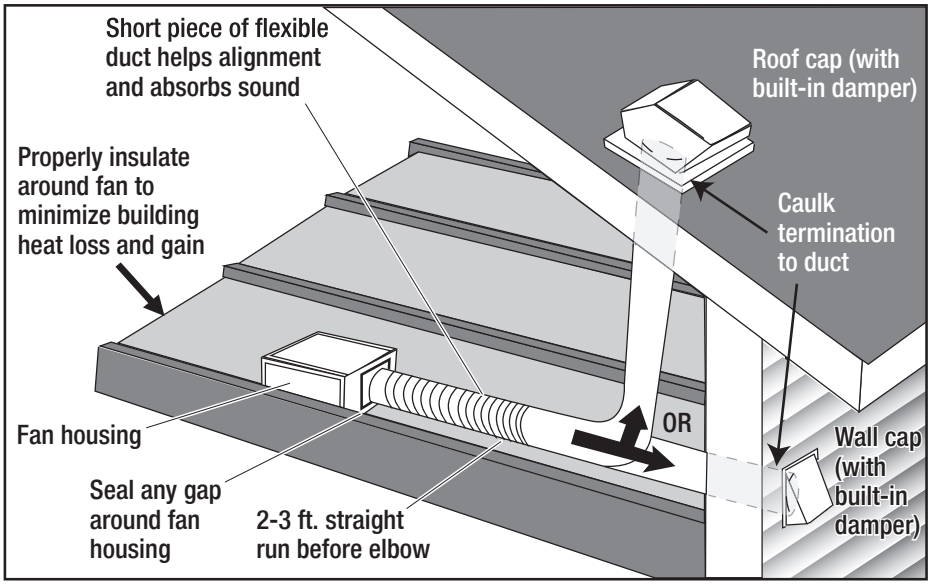

Pre-installation

WIRING DIAGRAMS

WARNING: Wiring must comply with all applicable electrical codes. Turn OFF power before removing or installing connectors.

WARNING: COPPER TO COPPER ONLY. Do not use Aluminum wire.

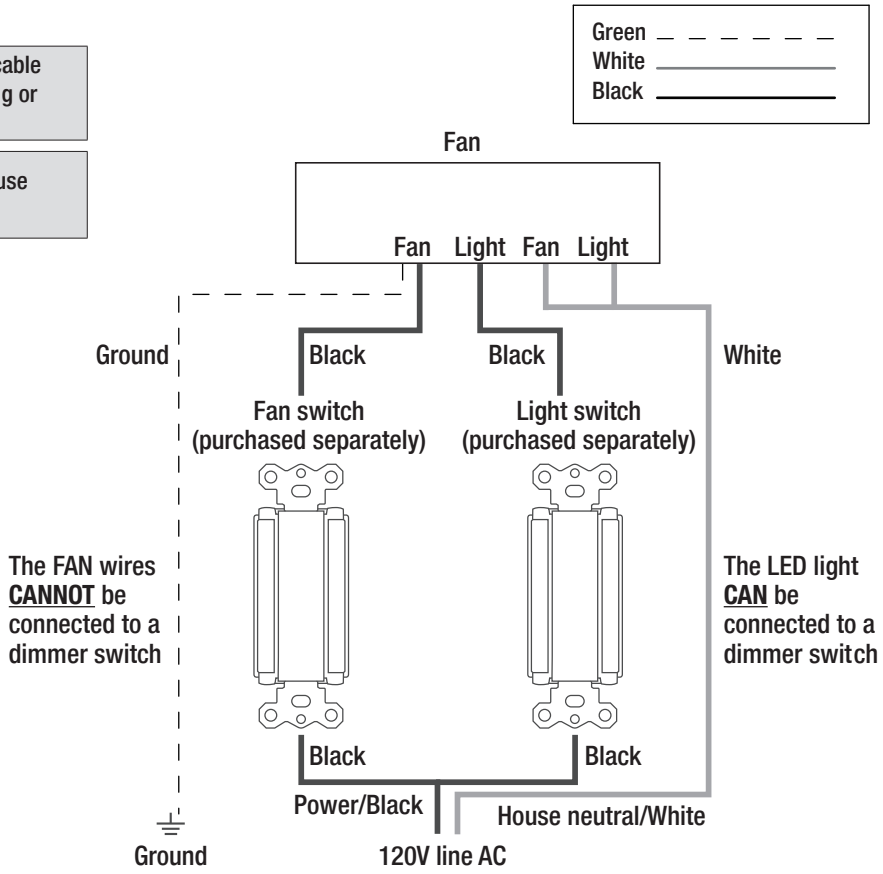

Pre-Installation (continued)

PLANNING YOUR INSTALLATION

When installing the ventilation fan in a new construction site, install the main body of the FAN and duct work during the rough-in construction of the building. The Grille should be installed after the finished ceiling is in place.

When installing in existing construction, use the provided cutout TEMPLATE for the ceiling. Grille edge should overlap finished ceiling.

CAUTION: Not for use in cooking area - see diagram below.

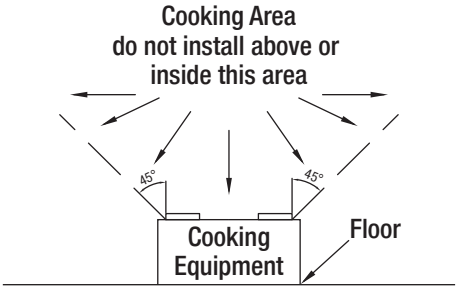

CAUTION: Do not install ventilation fan in areas where the duct work will require configuration as shown.

NOTE: If installing in existing construction, you may need to have access to space above and below the installation location.

There are multiple installation configurations possible for this ventilation fan. Not all configurations are shown.
If your installation requires a variation other than those shown, consult with a licensed contractor to determine the best installation for your project. If you are replacing an existing fan, ensure that the new FAN will adequately cover the existing opening.

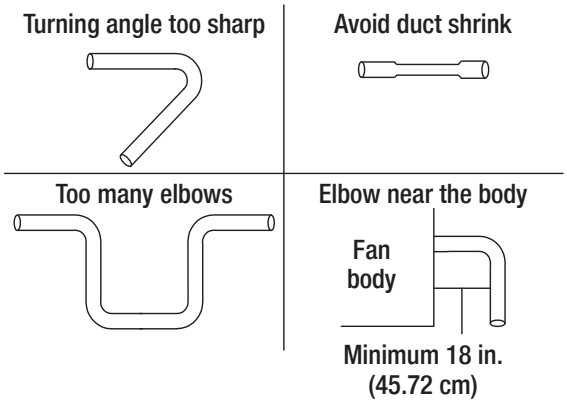

- □ Before beginning assembly of the product, make sure all parts are present. Compare parts with the package contents list and hardware contents. If any part is missing or damaged, do not attempt to assemble the product.

WARNING: Turn off electricity at breaker box before beginning installation.

NOTE: Installation may vary depending on how the previous bath fan was installed. Supplies necessary for the installation of your bath fan are not all included. However, most are available at your local home improvement or hardware store.

- □ Carefully remove the unit from the carton.
- □ Check area above installation location to be sure that wiring can run to the planned location and that the duct work can run and the area is sufficient for proper ventilation.
- □ Inspect duct work and wiring before proceeding with installation.
- □ Before installation, provide inspection and future maintenance access at a location that will not interfere with installation work.

Pre-Installation (continued)

TOOLS REQUIRED (NOT INCLUDED)

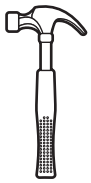
Claw hammer


Phillips screwdriver


Drill bits


Utility knife


Pliers

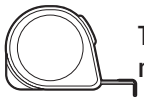
Tape measure


Safety goggles


Flat screwdriver


Power drill


Duct tape


Gloves


Pencil

HARDWARE INCLUDED

NOTE: Hardware not shown to actual size.


AA

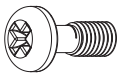
BB


CC

Part	Description	Quantity
AA	Joist screw (ST4 X 30)	5
BB	Short screw (M4 X 10)	1
CC	Flex bracket screw (M3 X 6)	5

Pre-installation (continued)

PACKAGE CONTENTS

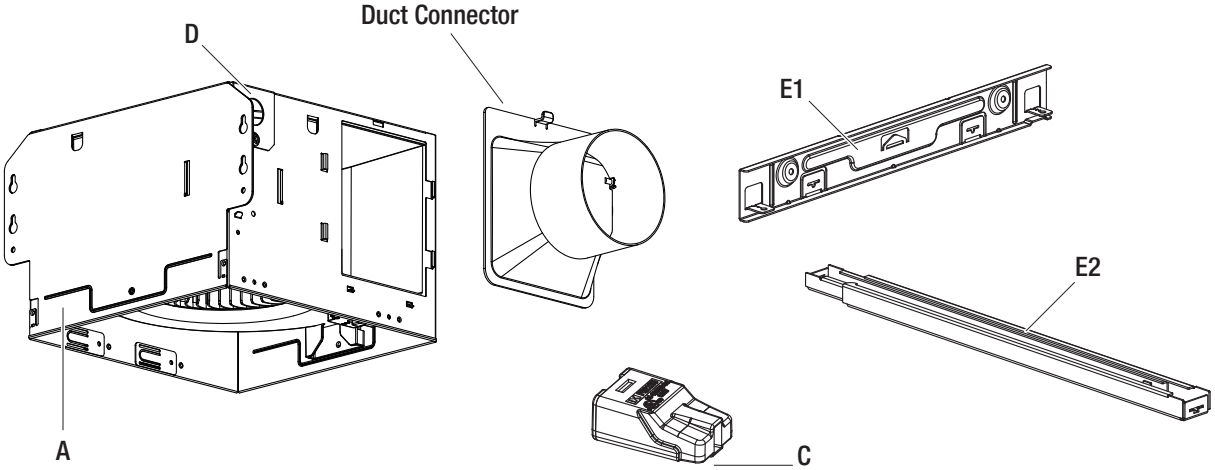

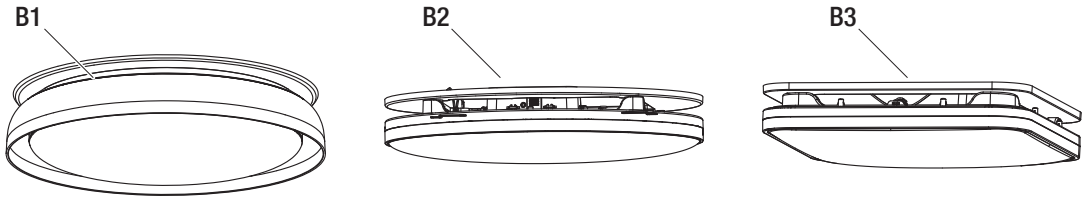

(BF1107) (BF1109) (BF1110)

F

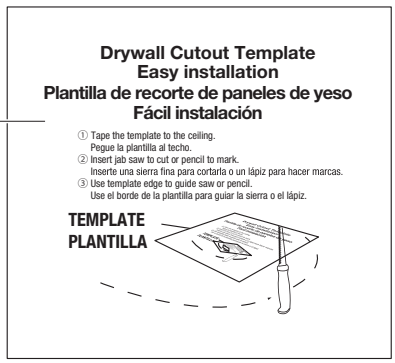

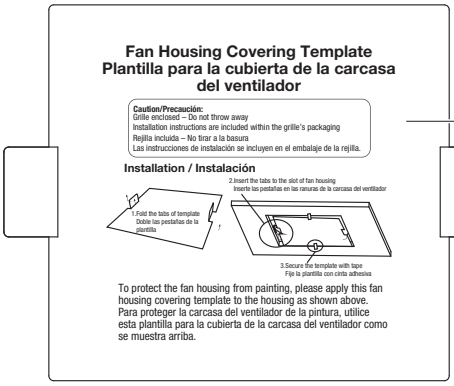

G

Part	Description	Quantity
A	Fan housing	1
B1/B2/B3	Grille with light	1
C	Quick connector	5
D	Wire cover	1
E1	Bracket side	2
E2	Slide rail	2
F	Cut-hole template	1
G	Drywall cover board	1

Pre-Assembly Flex Bracket

FLEX BRACKET INSTALLATION

1 Install the flex bracket

- ☐ On a flat surface, connect bracket sections (E1) and (E2) by aligning the tab on (E1) with the T shaped hole of (E2), matching the corresponding numbers.
  a. Number 1 matches Number 1
  b. Number 2 matches Number 2

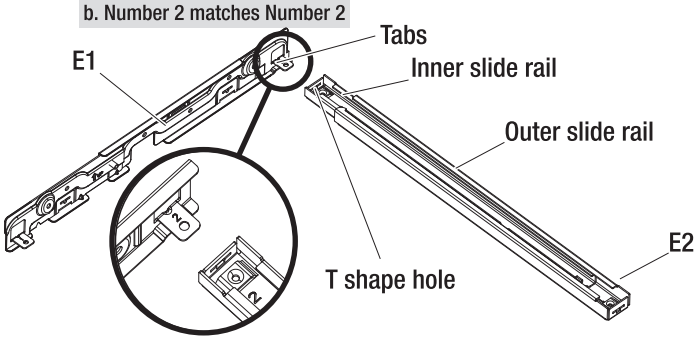

2 Copy step 1

- ☐ Connect bracket sections (E1) and (E2) by aligning the tab on (E1) with the T shaped hole of (E2), matching the corresponding numbers.
  a. Number 1 matches Number 1
  b. Number 2 matches Number 2

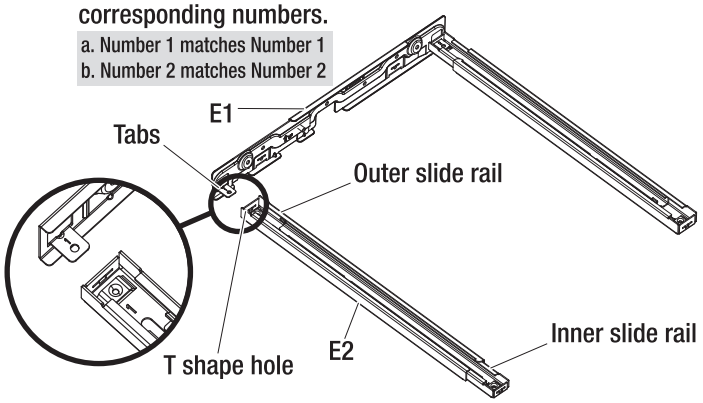

3 Copy step 2

- ☐ Install another bracket side into two set of slide rails.

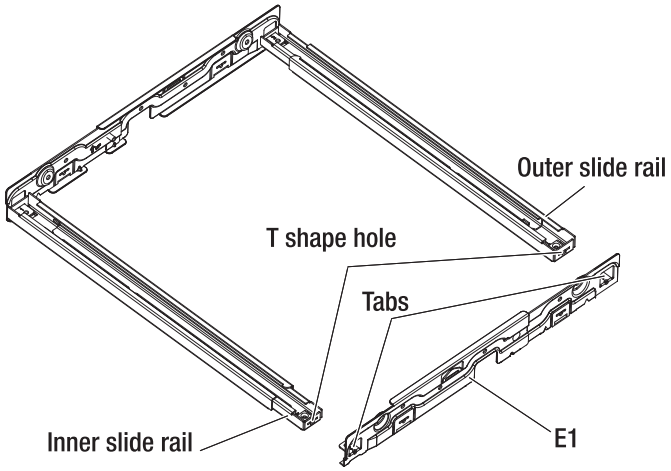

4 Completing the flex bracket installation

- ☐ Install 4 screws (CC) onto the four connect holes.

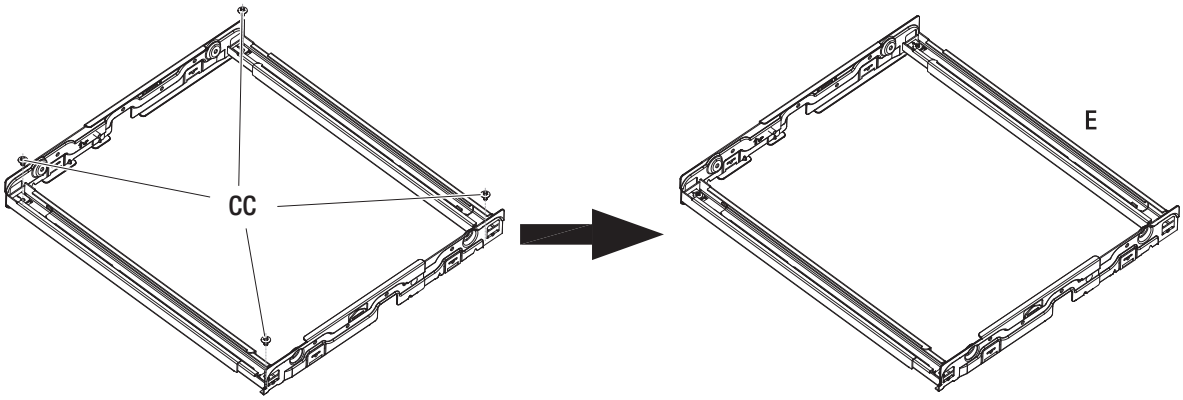

Installation

NEW CONSTRUCTION WITHOUT FLEX BRACKET

CAUTION: Make sure power is switched off at service panel before starting installation. Wear gloves during installing to help protect your hands from injury.

NOTE: Ceiling mount only.

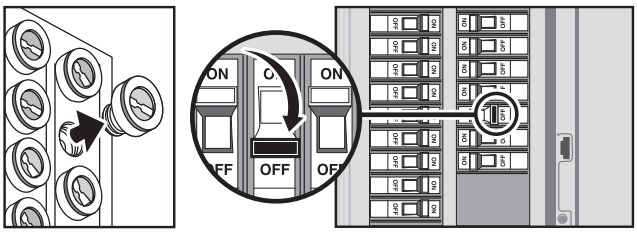

1 Remove the wire cover

- □ Loosen the short screw (BB) and remove the wire cover (D).

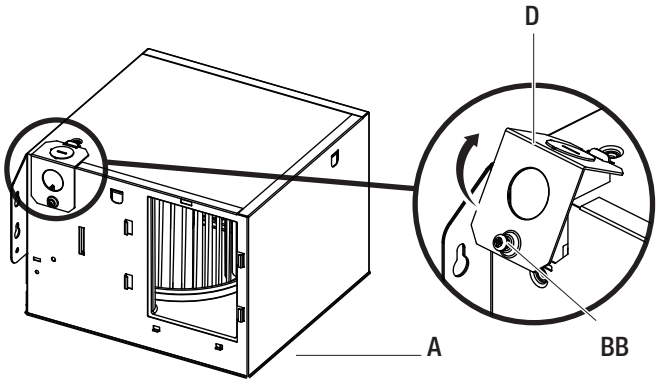

2 Mount the housing to the joist

① Bend down 2 tabs to right angle 90° on the side of flex bracket for positioning.

② Place the fan housing next to a ceiling joist or wall stud. The fan housing should be level and perpendicular to the joist or stud.

③ Secure fan housing (A) through mounting keyholes on bracket with 4 screws (AA). Make sure bottom of fan housing will be flush with finished ceiling.

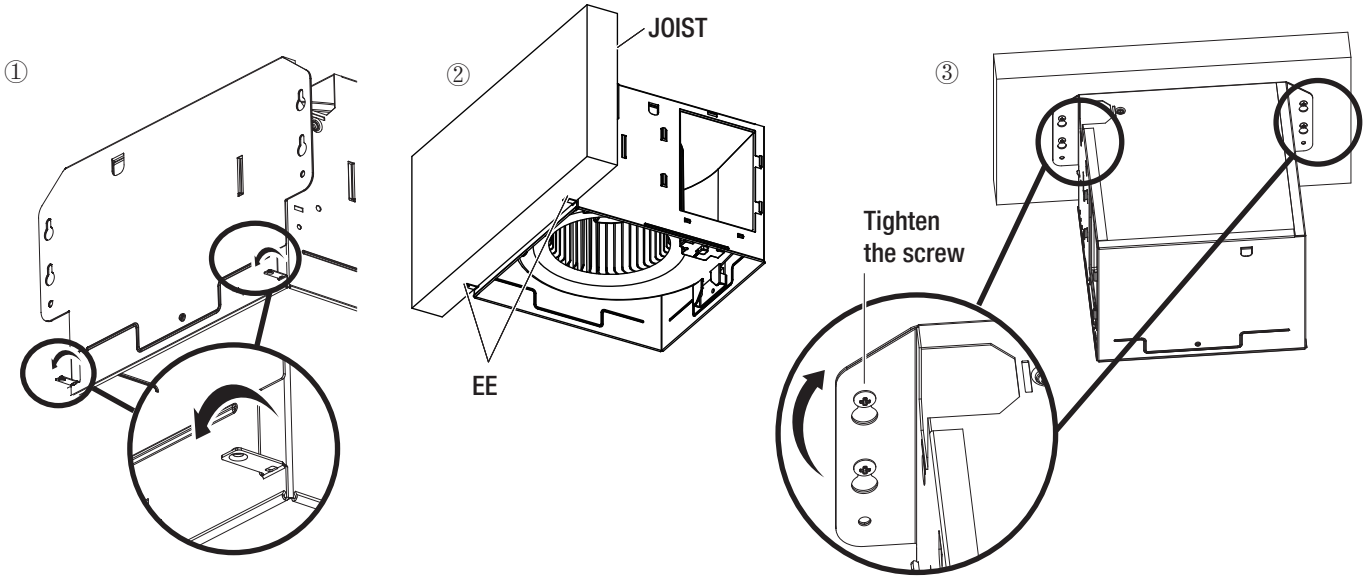

3 Connect the wire

- □ Pull the house wires through the knockout of wire cover (D). Using the quick connectors (C) to connect 120 V AC house wiring from the wall switch to the fan as shown in the wiring diagram on page 4.
- □ Carefully push the connected wires back into the wiring compartment of the fan housing (A). Reattach the wire cover (D) and attach it firmly with the short screw (BB).

CAUTION: If the electrical wires do not match the colors listed, you must determine what each house wire represents before connecting. You may need to consult an electrical contractor to determine safely.

NOTE: Attach the 1/2" ROMEX connector or 1/2" Flexible Metal Conduit connector (supplied by others) to wiring compartment cover and lock in place with 1/2" lock nut included with connector.

NOTE: 2 independent fan and light switches required for full functionality. The FAN wires CANNOT be connected to a dimmer switch.

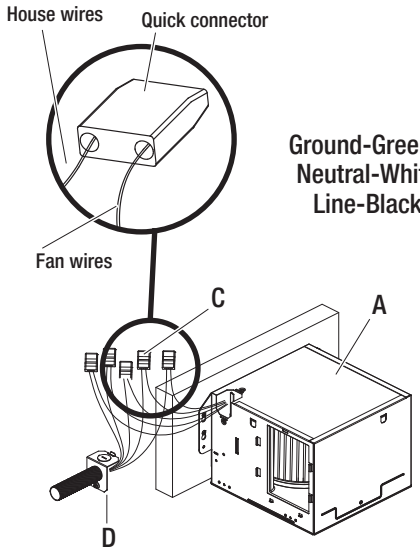

Ground-Green or copper wire
Neutral-White to White wire
Line-Black to Black wire

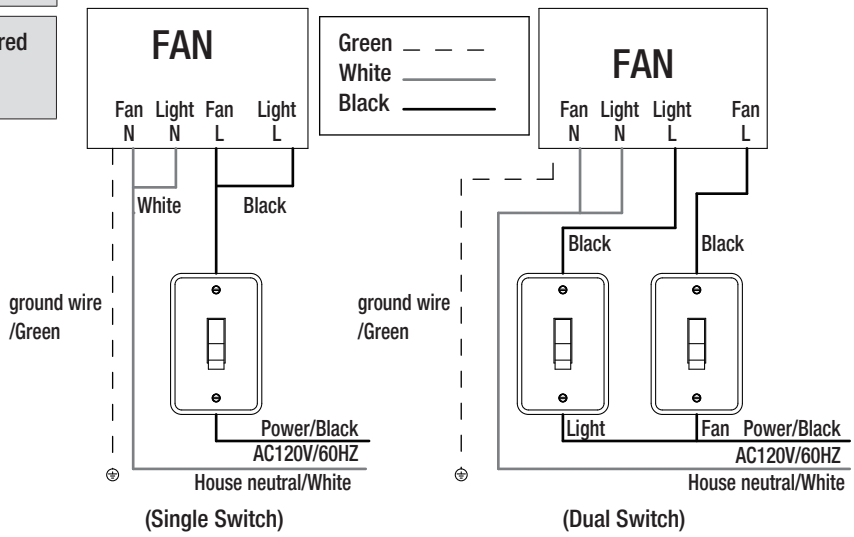

4 Connect the duct

① Remove the tape from the duct connector before installation.
② Connect a 4 in. flexible duct (not supplied) and vent to the duct connector. Secure it with duct tape (not supplied) or a clamp (not supplied) to make the connection secure and air tight.
③ Insert the duct connector back to the fan housing (A) follow the guide slot from up to down. And it will be in place with a "click" sound. Please secure it tightly.

CAUTION: Please make sure the vent to fully unfold to avoid blocking the damper opening and closing.

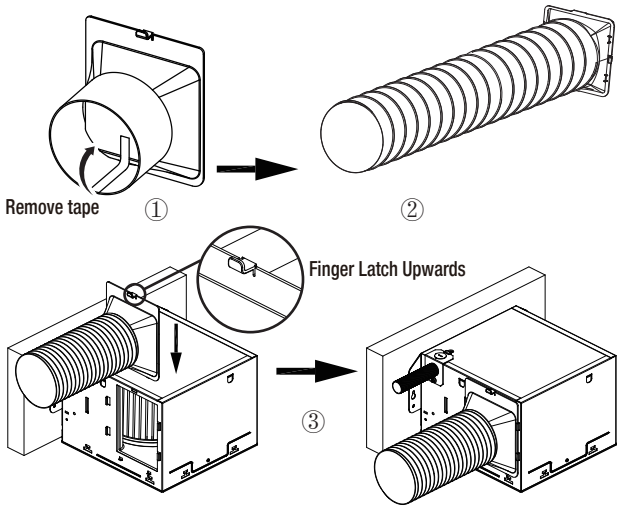

5 Select the light color and airflow

- □ Select desired LED color temperature by sliding the toggle switch on the back of the grille (B). Fasten down the waterproof cap after selected LED color temperature.

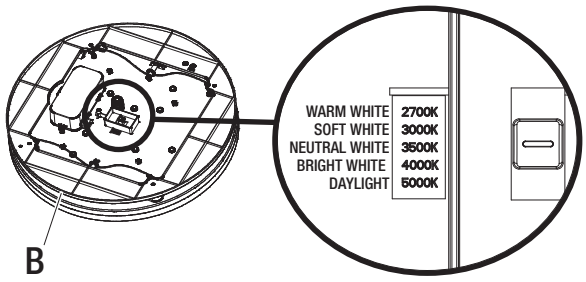

- □ Select desired airflow (80 CFM or 110 CFM) by sliding the toggle switch on the bottom of the housing (A).

NOTE: Make sure the waterproof cap installed well to prevent water from entering.

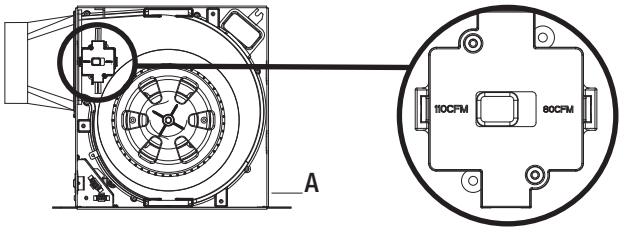

6 Finish the ceiling work

- □ After electrical and construction inspection is completed, the dry wall ceiling can be installed.
- □ Cut the ceiling hole with the cut-hole template (F) or the size 10 1/4" x 9 3/8" (260 mm x 238 mm). Ceiling hole should be aligned with the inside edge of fan housing.

IMPORTANT: Cover and seal up all gaps with duct tape.

NOTE: MAKE SURE ONE EDGE OF THE OPENING IS FLUSH WITH THE JOIST FOR INSTALLATION.

NOTE: That it is common practice in heating and ventilation systems using sheet metal duct work and fittings or flexible duct work tubing to use duct tape or aluminum tape to ensure airtight seals and improve efficiency.

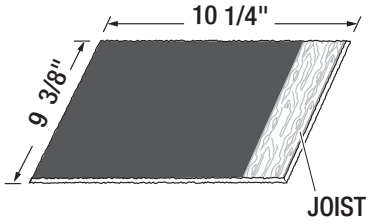

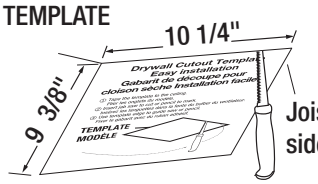

Align shorter side with joist side

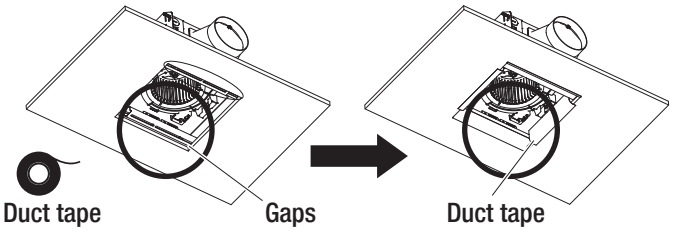

7 Install the grille with light

① Attach the grille by squeezing one spring together and inserting the springs into spring guides in the fan housing (A).

② Connect LED wire to fan housing by terminal.

③ Then insert another spring and push the grille (B) up against the ceiling.

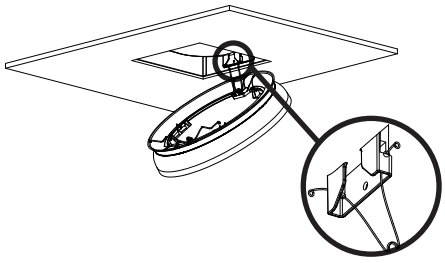

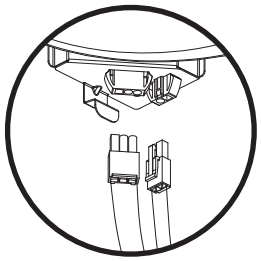

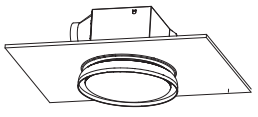

BF1107

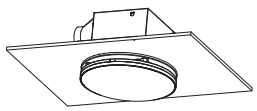

BF1109

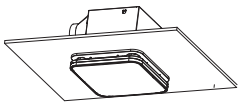

BF1110

NOTE: Suggest the humidity sensor indicator light face to the bathroom door. Check that the installation is secure and safe from falling objects.

Installation (continued)

NEW CONSTRUCTION WITH FLEX BRACKET

CAUTION: Make sure power is switched off at service panel before starting installation. Wear gloves during installing to help protect your hands from injury.

NOTE: Ceiling mount only.

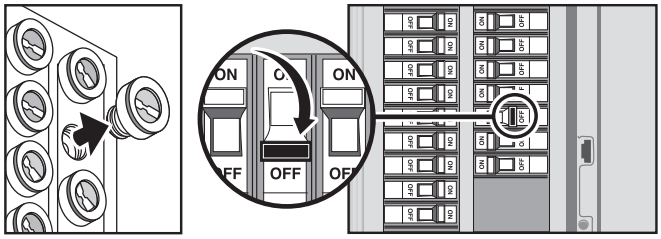

1 Install the flex bracket

- □ Bend down 6 tabs (T1 and T2) to right angle 90° on the side of flex bracket (E1) for positioning.
- □ Lift flex bracket lean against the joist and make sure the two (T1) tabs are close to the bottom of flex joist.
- □ Insert the (T2) tab into the joist with hammer.
- □ Install the flex bracket to joists by using 2 screws (AA) on one side.
- □ Adjust the length of flex bracket (E2) to fit the spacing between the joists (11.5 in. to 22 in.).
- □ Attach another side of flex bracket with the other 2 screws (AA) .
- □ Please make sure the bottom of the flex bracket will be flush with the bottom of the joists.

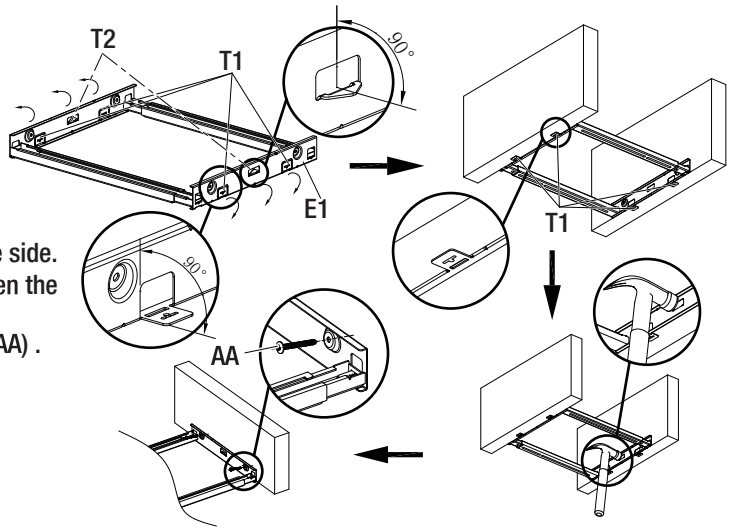

2 Adjust the tabs of fan housing

- □ Pull the 4 tabs (DD) of the fan housing into the vertical position.

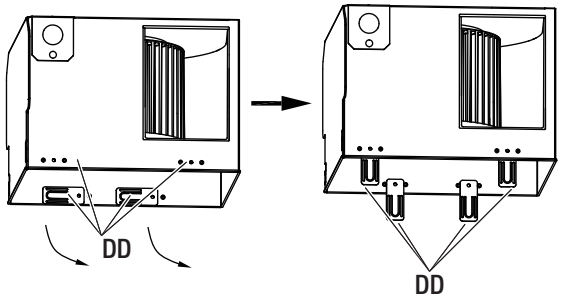

3 Install the fan housing on bracket

- □ Align the 4 tabs (DD) on the fan housing through the slots on the flex bracket (E). Then insert the tabs through the slots until the fan housing (A) sitting on the flex bracket (E).
- □ Then bend the tabs (DD) to both sides to attach the fan housing firmly on the flex bracket (E).

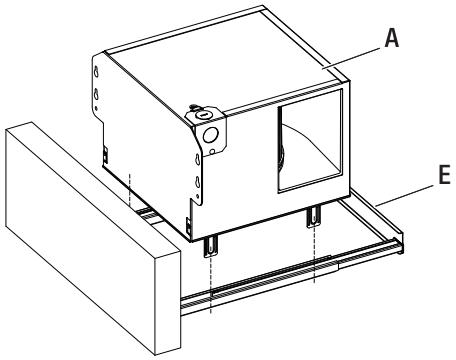

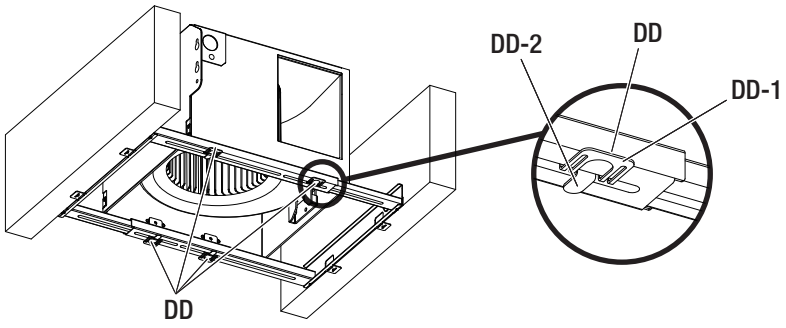

4 Connect the wire

① Loosen the short screw (BB) and remove the wire cover (D).

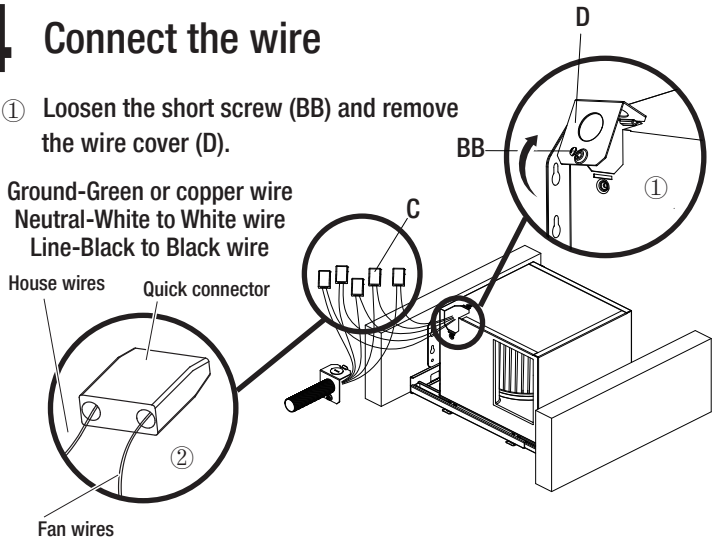

CAUTION: If the electrical wires do not match the colors listed, you must determine what each house wire represents before connecting. You may need to consult an electrical contractor to determine safely.

NOTE: Attach the 1/2" ROMEX connector or 1/2" Flexible Metal Conduit connector (supplied by others) to wiring compartment cover and lock in place with 1/2" lock nut included with connector.

NOTE: 2 independent fan and light switches required for full functionality. The FAN wires CANNOT be connected to a dimmer switch.

② Pull the house wires through the knockout of wire cover (D). Using the quick connectors (C) to connect 120 V AC house wiring from the wall switch to the fan as shown in the wiring diagram on page 4.

③ Carefully push the connected wires back into the wiring compartment of the fan housing (A). Reattach the wire cover (D) and attach it firmly with the short screw (BB).

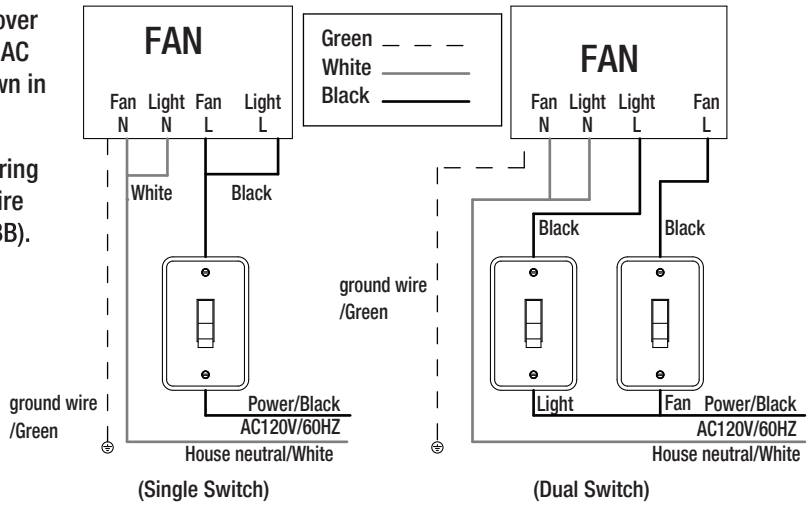

5 Connect the duct

① Remove the tape from the duct connector before installation.

② Connect a 4 in. flexible duct (not supplied) and vent to the duct connector. Secure it with duct tape (not supplied) or a clamp (not supplied) to make the connection secure and air tight.

③ Insert the duct connector back to the fan housing (A) follow the guide slot from up to down. And it will be in place with a "click" sound. Please secure it tightly. Turn on the power source. Check the fan for any abnormal sound or vibration.

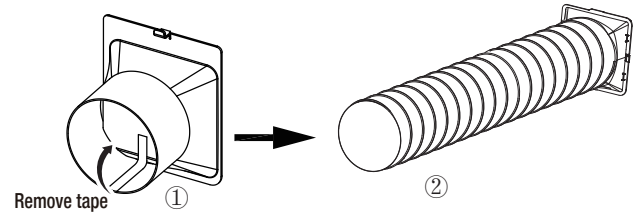

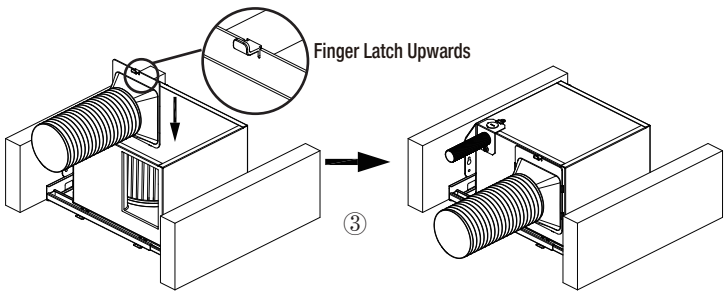

CAUTION: After checking the fan, please remember to turn off the power before next installation step.

CAUTION: Please make sure the duct to fully unfold to avoid blocking the damper opening and closing.

Installation (continued)

6 Finish the ceiling work

- □ After electrical and construction installation is completed, the dry wall ceiling can be installed.
- □ Cut the ceiling hole with the cut-hole template (F) or the size 10 1/4" x 9 3/8" (260 mm x 238 mm). Ceiling hole should be aligned with the inside edge of fan housing.

IMPORTANT: Cover and seal up all gaps with duct tape.

NOTE: That it is common practice in heating and ventilation systems using sheet metal duct work and fittings or flexible duct work tubing to use duct tape or aluminum tape to ensure airtight seals and improve efficiency.

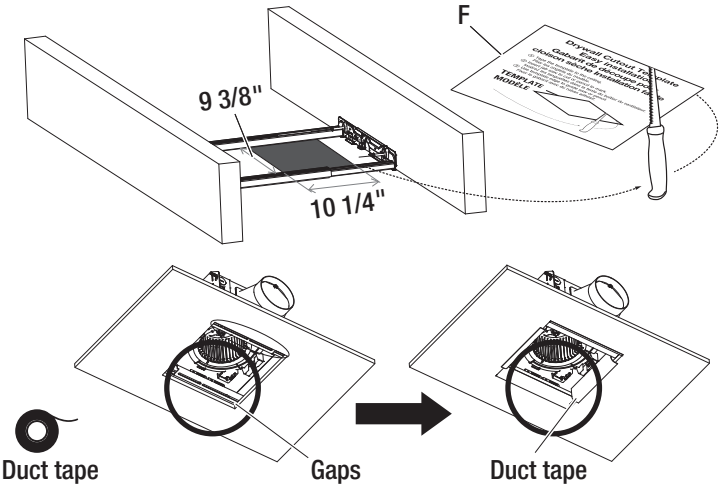

7 Select the light color and airflow

- □ Select desired LED color temperature by sliding the toggle switch on the back of the grille (B). Fasten down the waterproof cap after selected LED color temperature.

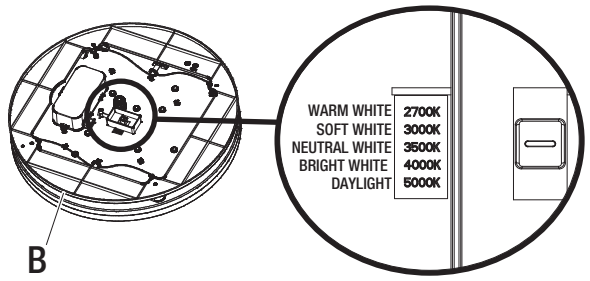

- □ Select desired airflow (80 CFM or 110 CFM) by sliding the toggle switch on the bottom of the housing (A).

NOTE: Make sure the waterproof cap installed well to prevent water from entering.

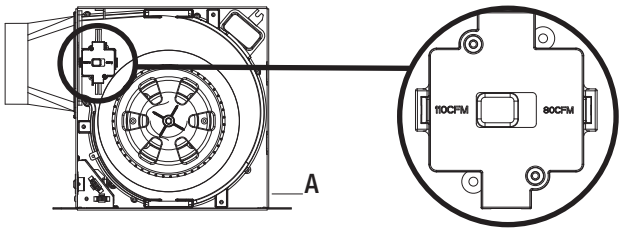

8 Install the grille with light

① Attach the grille by squeezing one spring together and inserting the springs into spring guides in the fan housing (A).

② Connect LED wire to fan housing by terminal.

③ Then insert another spring and push the grille (B) up against the ceiling.

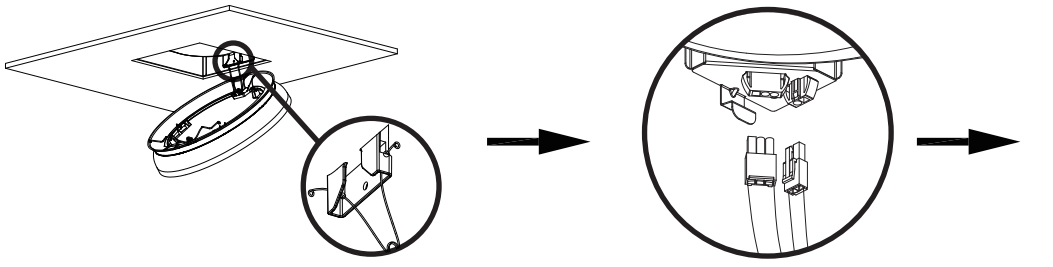

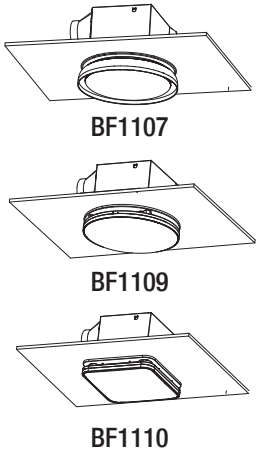

NOTE: Suggest the humidity sensor indicator light face to the bathroom door. Check that the installation is secure and safe from falling objects.

Installation (continued)

EXISTING CONSTRUCTION

CAUTION: Make sure power is switched off at service panel before starting installation. Wear gloves during installing to help protect your hands from injury.

NOTE: Ceiling mount only.

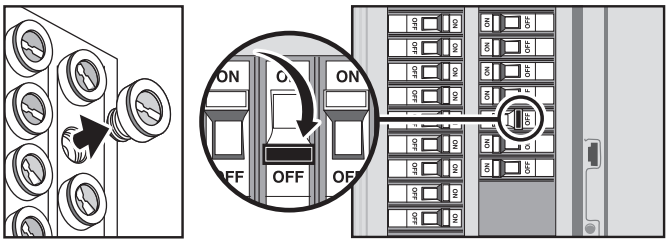

1 Remove the existing fan

- □ Remove the old fan from the ceiling.

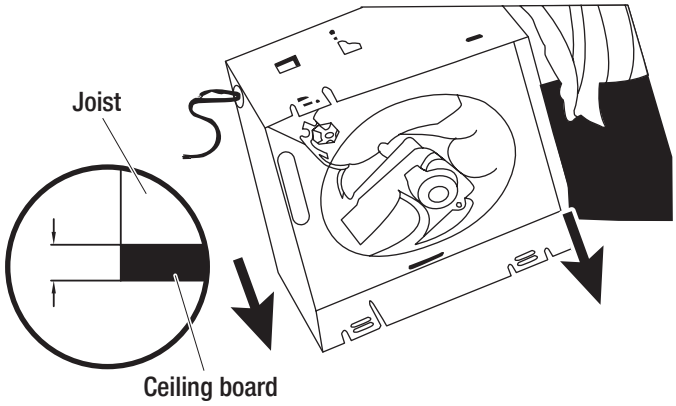

2 Ceiling cut out work

- □ Measure the opening to ensure it is large enough to accommodate the new fan body (A) (10 1/4" x 9 3/8").
- □ If this fan is not replacing an old fan, be sure to cut a 10 1/4" x 9 3/8" opening for the fan body (A).

CAUTION: Wear safety goggles to prevent getting dust, falling insulation or other debris into your eyes, nose and mouth. Carefully cut open the ceiling hole with out cutting into electrical or gas or water lines that may not be visible.

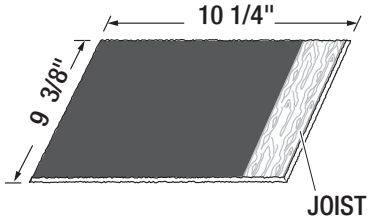

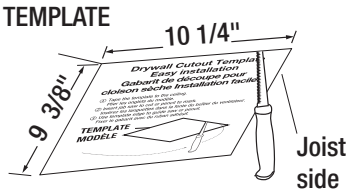

Align shorter side with joist side

3 Remove the wire cover

- □ Loosen the short screw (BB) and remove the wire cover (D).

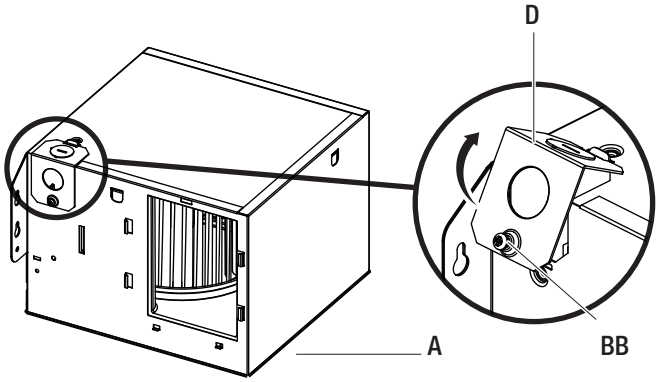

4 Place the fan housing

- ☐ Place the fan housing (A) inside the ceiling through the hole and then place on the side. Shown as in picture.

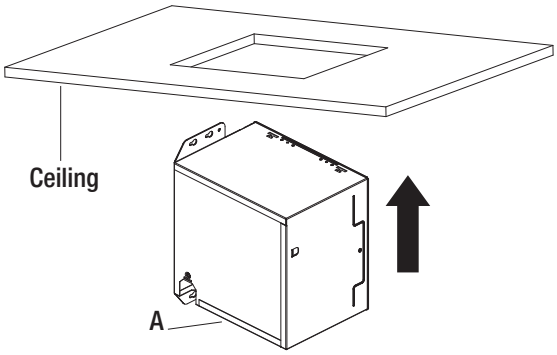

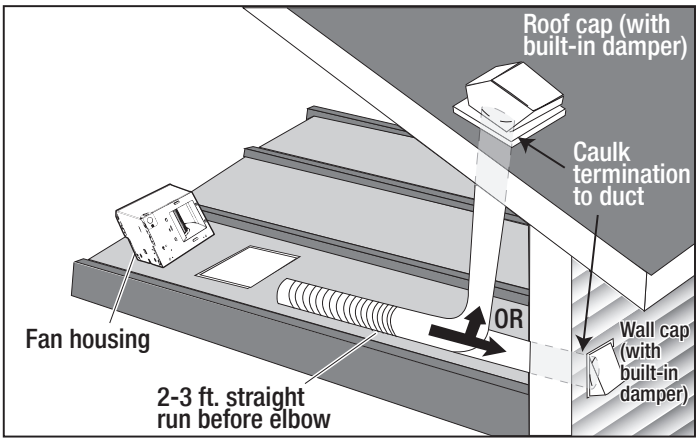

5 Connect the wire

- ☐ Pull the house wires through the knockout of wire cover (D). Using the quick connectors (C) to connect 120 V AC house wiring from the wall switch to the fan as shown in the wiring diagram on page 4.
- ☐ Carefully push the connected wires back into the wiring compartment of the fan housing (A). Reattach the wire cover (D) and attach it firmly with the short screw (BB).

CAUTION: If the electrical wires do not match the colors listed, you must determine what each house wire represents before connecting. You may need to consult an electrical contractor to determine safely.

NOTE: Attach the 1/2" ROMEX connector or 1/2" Flexible Metal Conduit connector (supplied by others) to wiring compartment cover and lock in place with 1/2" lock nut included with connector.

NOTE: 2 independent fan and light switches required for full functionality. The FAN wires CANNOT be connected to a dimmer switch.

Ground-Green or copper wire
Neutral-White to White wire
Line-Black to Black wire

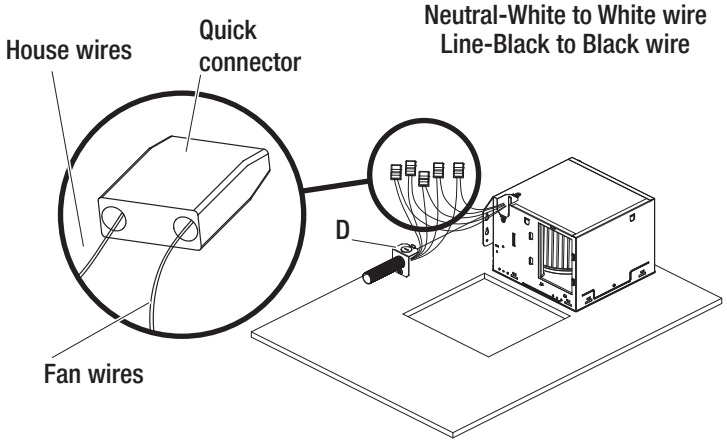

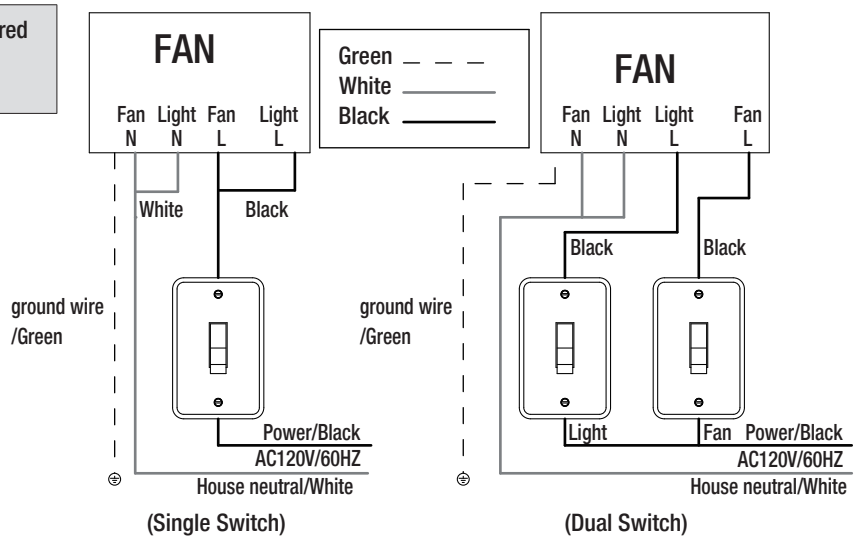

6 Connect the duct

① Remove the tape from the duct connector before installation.

② Connect a 4 in. flexible duct (not supplied) and vent to the duct connector. Secure it with duct tape (not supplied) or a clamp (not supplied) to make the connection secure and air tight.

③ Insert the duct connector back to the fan housing (A) follow the guide slot from up to down. And it will be in place with a "click" sound. Please secure it tightly.

CAUTION: Please make sure the vent to fully unfold to avoid blocking the damper opening and closing.

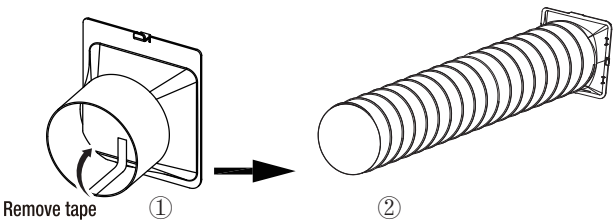

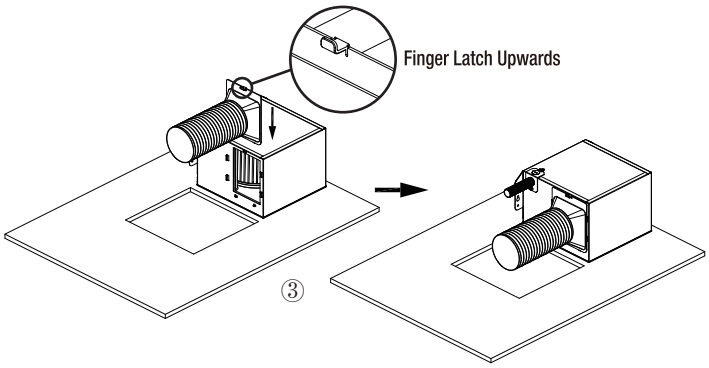

7 Install the flex bracket

- □ Bend down middle 2 tabs to right angle 90° on the side of flex bracket (E1) for positioning.
- □ Lift flex bracket (E) on the ceiling through hole.
- □ Insert the (T2) tab into the joist with hammer.
- □ Install the flex bracket to joists by using 2 screws (AA) on one side.
- □ Adjust the length of flex bracket (E2) to fit the spacing between the joists (11 1/2 in. to 22 in.).
- □ Attach another side of flex bracket with the other 2 screws (AA) .

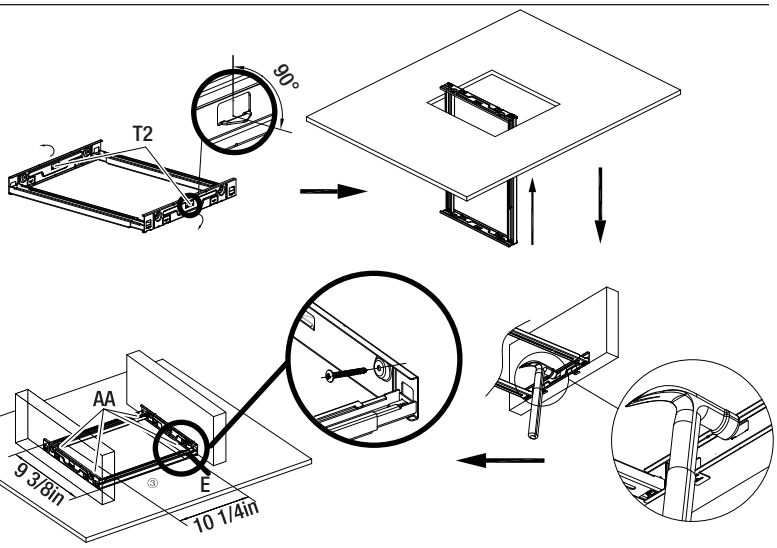

8 Adjust the inserts of fan housing

- □ Pull the 4 tabs (DD) of the fan housing into the vertical position.

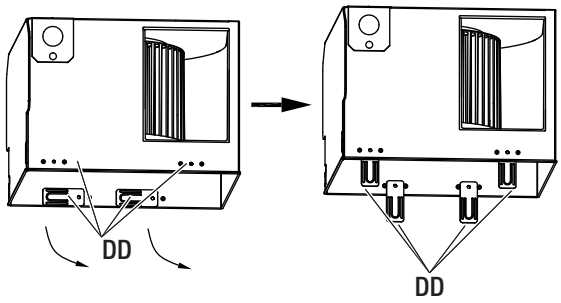

9 Install the fan housing on bracket

- □ Align the 4 tabs (DD) on the fan housing through the slots on the flex bracket (E). Then insert the tabs through the slots until the fan housing (A) sitting on the flex bracket (E).
- □ Then bend the tabs (DD) to both sides to attach the fan housing firmly on the flex bracket (E).

IMPORTANT: Cover and seal up all gaps with duct tape.

NOTE: That it is common practice in heating and ventilation systems using sheet metal duct work and fittings or flexible duct work tubing to use duct tape or aluminum tape to ensure airtight seals and improve efficiency.

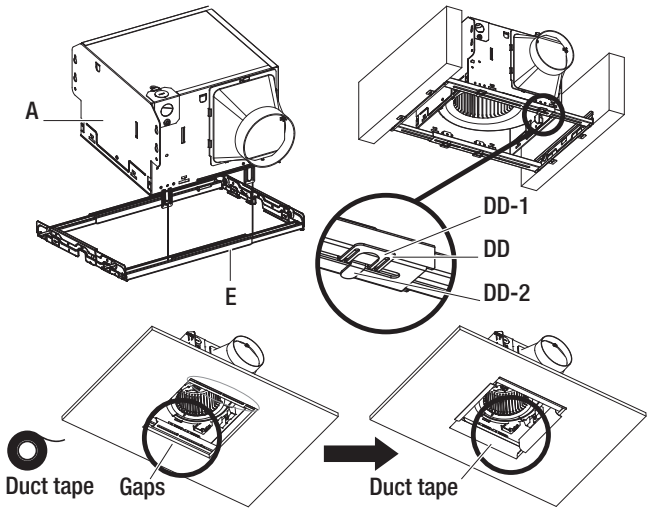

10 Select the light color and airflow

- □ Select desired LED color temperature by sliding the toggle switch on the back of the grille (B). Fasten down the waterproof cap after selected LED color temperature.

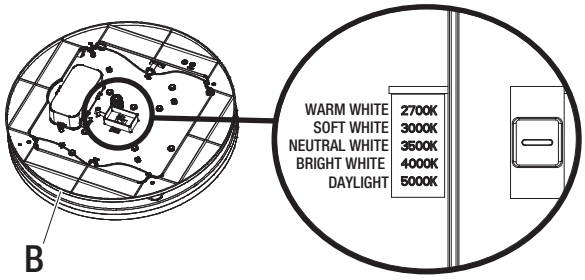

- □ Select desired airflow (80 CFM or 110 CFM) by sliding the toggle switch on the bottom of the housing (A).

NOTE: Make sure the waterproof cap installed well to prevent water from entering.

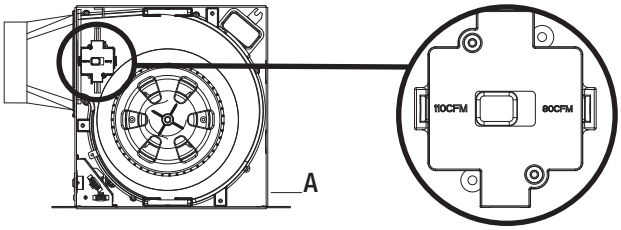

11 Install the grille with light

① Attach the grille by squeezing one spring together and inserting the springs into spring guides in the fan housing (A).

② Connect LED wire to fan housing by terminal.

③ Then insert another spring and push the grille (B) up against the ceiling.

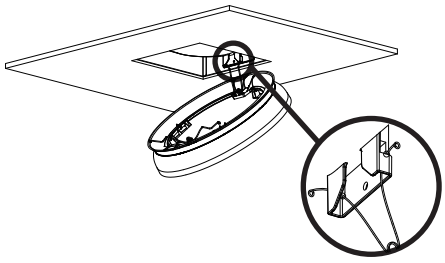

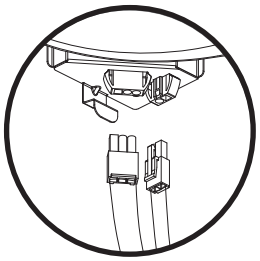

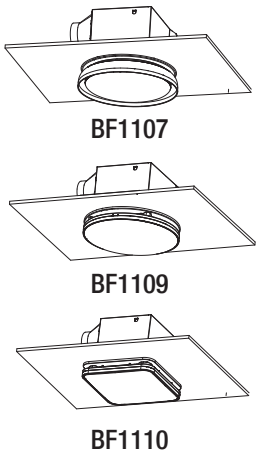

NOTE: Suggest the humidity sensor indicator light face to the bathroom door. Check that the installation is secure and safe from falling objects.