EVERBILT™ PULL-OUT HOSE INSTALL INSTRUCTIONS

PACKAGE CONTENT

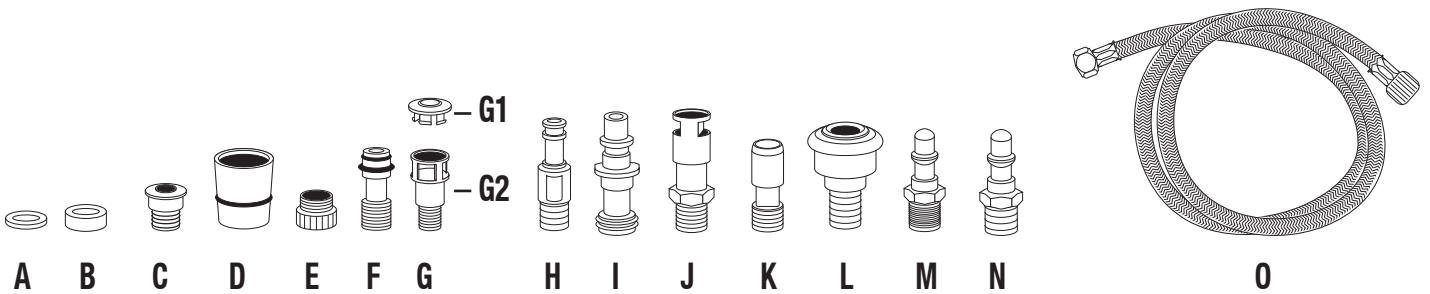

Part	Description	Color
A	Thin Washer	Black
B	Thick Washer	Black
C	Adapter for Sprayer with 1/2" NPSM Male Threads	Silver
D	Ferrule Nut	Silver
E	Barrel Nut	Silver
F	Adapter for Sprayer with 5/8" – 18 UNF Female Threads	Bronze
G1	Adapter Top for Oakbrook & Glacier Bay Faucet	Black
G2	Adapter Body for Oakbrook & Glacier Bay Faucet	Black

Part	Description	Color
H	Adapter for Moen Faucet	Black
I	Adapter for Delta Diamond Seal Faucet	Black
J	Adapter for Delta Faucet with RP32522 Clip	Bronze
K	Adapter for Delta Faucet with RP69011 Clip	Bronze
L	Quick Connect Adapter	Bronze
M	Adapter for Older Models of American Standard®, Delta®, Kohler®, & Moen®	Bronze
N	Adapter for Older Models of Pfister®	Bronze
O	Hose	Silver

INSTRUCTIONS:

1. Turn off water supply.
2. Measure location of weights on old hose and mark the location on the new hose.
3. Unthread connectors to remove old hose from the faucet and sprayer.
4. Connect the hose to the sprayer based on thread type (see 4a or 4b)
5. Connect the hose to the faucet based on connector type (see 5a thru 5e)
6. Turn on water supply and check for leaks.
7. Reinstall weights on the marked location of the hose.

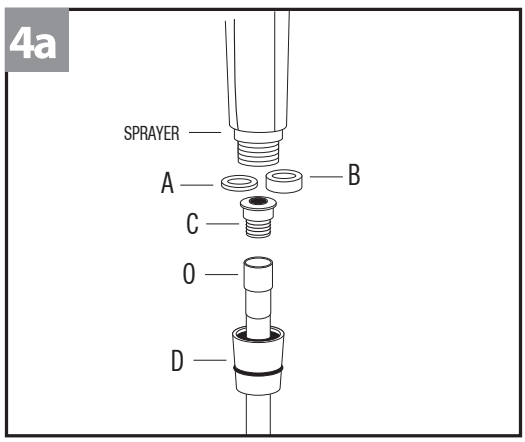

FOR 1/2 in NPSM MALE THREADS

1. Slide ferrule nut (D) over the hose (O) with the threads facing upward and screw the adapter (C) into the hose. Do not over tighten.
2. Slide the ferrule nut (D) up until it covers the adapter (C) then place the thin washer (A) on top of the adapter (C).
3. Screw ferrule nut (D) onto the sprayer. Use the thick washer (B) instead, if the thin washer (A) is not enough to create a tight seal. Do not overtighten.

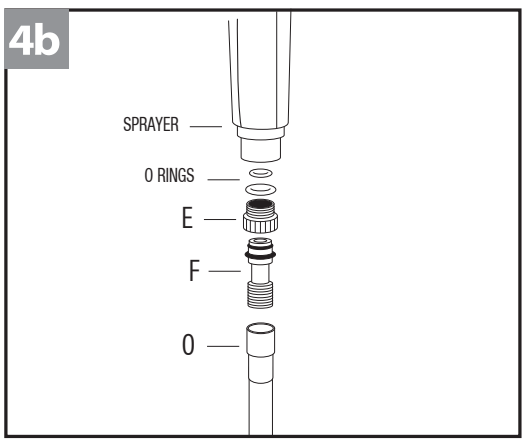

FOR 5/8 in – 18 UNF FEMALE THREADS

1. Wrap pipe thread tape (not included) around the threads of the adapter (F) then thread the adapter (F) onto the hose (O).
2. Insert the adapter (F) into the barrel nut (E).
3. Place the original large o–ring then the original small o–ring into the barrel nut (E). O–rings not included.
4. Push and thread the adapter (F) with barrel nut (E) into the sprayer and tighten. Do not over tighten.

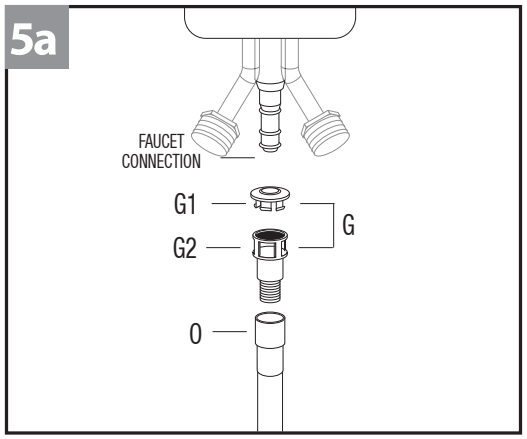

OAKBROOK & GLACIER BAY FAUCET

1. Check to ensure that the adapter top (G1) is secure and snapped in the adapter body (G2).
2. Wrap pipe thread tape (not included) around the threads of the replacement adapter (G) then insert the adapter (G) into the hose (O) and tighten.
3. Push and snap the threaded adapter with hose onto the faucet connection.
4. Check to ensure the hose connection is secure.

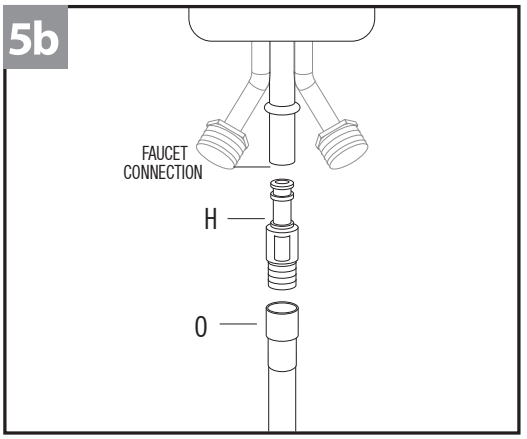

MOEN FAUCET

1. Wrap pipe thread tape (not included) around the threads of the replacement adapter (H) then insert the adapter (H) into the hose (O) and tighten.
2. Push and insert the adapter (H) with hose onto the faucet connection.
3. Check to ensure the hose connection is secure.

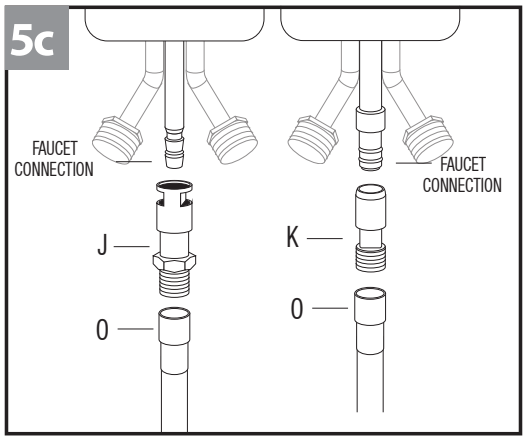

DELTA FAUCET

1. Wrap pipe thread tape (not included) around the threads of the replacement adapter (J/K) then insert the adapter (J/K) into the hose (O) and tighten.
2. Push and insert the threaded adapter (J/K) with hose onto the faucet connection.
3. Push and snap the original faucet clip (not included) into the adapter (J/K) and secure in place.
4. Check to ensure the hose connection is secure.

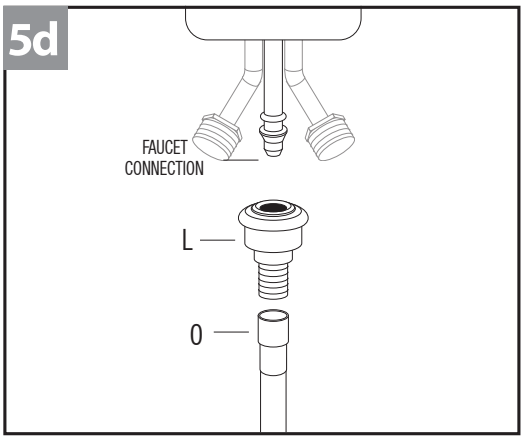

NIPPLE FAUCET

1. Wrap pipe thread tape (not included) around the threads of the quick connect adapter (L) then insert the adapter into the hose (O) and tighten.
2. Pull down the white band of the quick connect adapter (L) then push the adapter onto the faucet connection.
3. Release the white band once the quick connect adapter (L) is in place.
4. Check to ensure the hose connection is secure

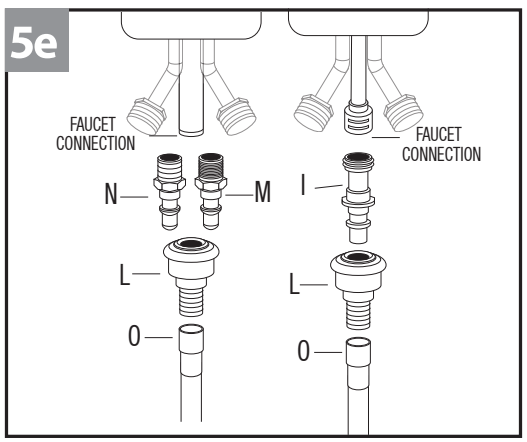

OLDER MODELS OF AMERICAN STANDARD®, DELTA®, KOHLER®, MOEN®& PFISTER® OR DELTA® DIAMOND SEAL FAUCET CONNECTION

1. Wrap pipe thread tape (not included) around the threads of the quick connect adapter (L) then insert the adapter into the hose (O) and tighten.
2. Find the right replacement adapter (M/N/I) for your faucet connection.
3. Pull down the white band of the quick connect adapter (L) then push the quick connect adapter (L) onto the adapter (M/N/I).
4. Release the white band once the quick connect adapter (L) is in place.
5. Thread and tighten the adapter (M/N/I) onto the faucet connection.
6. For Delta Diamond Seal Faucets, push and snap the original faucet clip (not included) into the adapter (I) and secure in place.
7. Check to ensure the hose connection is secure.