GLUCKSTEINELEMENTS

Item #1001 591 906
Model #38679-HBCB

USE AND CARE GUIDE

1-LIGHT WALL SCONCE

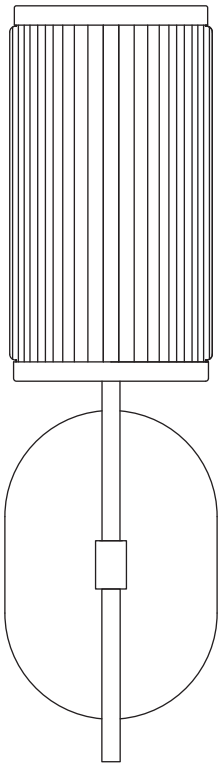

Questions, problems, missing parts? Before returning to the store,
call Gluckstein Elements Customer Service
8 a.m. - 7 p.m., EST, Monday-Friday, 9 a.m. - 6 p.m., EST, Saturday

HOMEDEPOT.CA

GLUCKSTEINELEMENTS.COM

THANK YOU

We appreciate the trust and confidence you have placed in Gluckstein Elements through the purchase of this 1-light wall sconce. We strive to continually create quality products designed to enhance your home. Visit us online to see our full line of products available for your home improvement needs. Thank you for choosing Gluckstein Elements!

Table of Contents

Table of Contents....2
Safety Information....2
Warranty....2
Pre-Installation....3
Planning Installation....3
Tools Required....3
Hardware Included....3
Package Contents....4
Installation....5
Care & Cleaning....7
Troubleshooting....7

Safety Information

- □ Read all instructions before assembling and installing.
- □ Consult a qualified electrician for installation of this fixture.
- □ If you have any non-electrical questions about this fixture, please contact our Customer Service Team visit www.HOMEDEPOT.ca. / GLUCKSTEINELEMENTS.com.
- □ Please reference your SKU 1001 591 906 or (UPC 773546307413).
- □ Keep your receipt and these instructions for proof of purchase.

CAUTION: Before starting installation of this fixture or removal of a previous fixture, disconnect the power by turning off the circuit breaker or by removing the fuse at the fuse box.

IMPORTANT: Inspect the wire insulation for any cuts, abrasions, or exposed copper that have occurred during shipping. If there is a defect in the wire, do not continue the assembly process.

IMPORTANT: Do not install this lighting system in wet locations.

Warranty

LIMITED WARRANTY

WHAT IS COVERED

The manufacturer warrants this lighting fixture to be free from defects in materials and workmanship for a period of five (5) years from date of purchase. This warranty applies only to the original consumer purchaser and only to products used in normal use and service. If this product is found to be defective, the manufacturer's only obligation, and your exclusive remedy, is the repair or replacement of the product at the manufacturer's discretion, provided that the product has not been damaged through misuse, abuse, accident, modification, alteration, neglect, or mishandling.

WHAT IS NOT COVERED

This warranty shall not apply to any product that is found to have been improperly installed, set-up, or used in any way not in accordance with the instructions supplied with the product. This warranty shall not apply to a failure of the product as a result of an accident, misuse, abuse, negligence, alteration, faulty installation, or any other failure not relating to faulty material or workmanship. This warranty shall not apply to the finish on any portion of the product, such as surface and/or weathering, as this is considered normal wear and tear. The manufacturer does not warrant and specially disclaims any warranty, whether express or implied, of fitness for a particular purpose, other than the warranty contained herein. The manufacturer specifically disclaims any liability and shall not be liable for any consequential or incidental loss or damage, including but not limited to any labor/expense costs involved in the replacement or repair of said product.

Contact the Customer Service Team visit www.HOMEDEPOT.ca. / GLUCKSTEINELEMENTS.com.

Pre-Installation

PLANNING INSTALLATION

Read all instructions before assembly and installation. To avoid damaging this product, assemble it on a soft, non-abrasive surface, such as carpet or cardboard. Inspect each part for defects that may have occurred during shipping. Keep your receipt and these instructions for proof of purchase.

TOOLS REQUIRED


Safety goggles

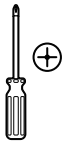
Phillips screwdriver


Flathead screwdriver

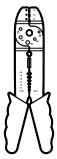
Wire strippers


Wire cutters


Ladder

HARDWARE INCLUDED

NOTE: Hardware not shown to actual size.

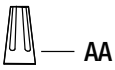
AA

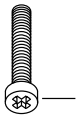
BB


CC


DD


EE


FF

Part	Description	Quantity
AA	Wire nut	3
BB	Outlet box screw	2
CC	Ground screw	1
DD	Ball nut	2
EE	Universal crossbar	1
FF	Socket ring	1

Pre-Installation (continued)

PACKAGE CONTENTS

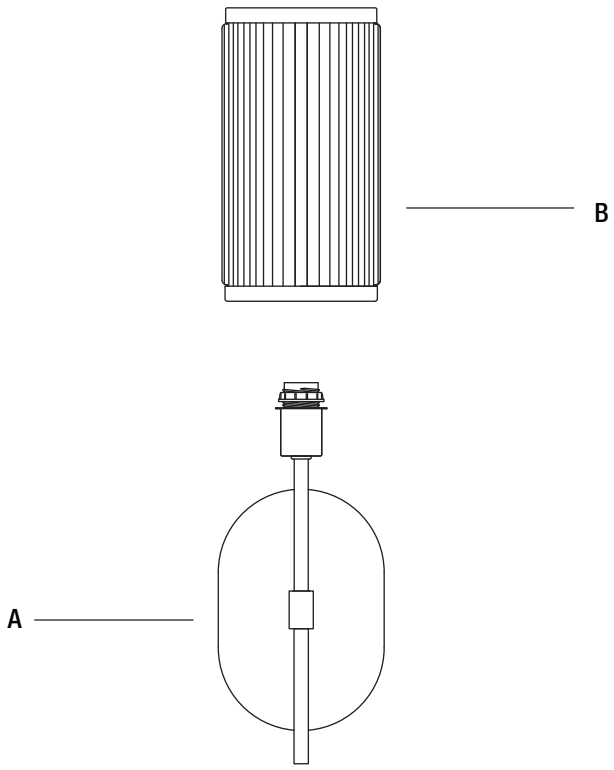

Part	Description	Quantity
A	Fixture body	1
B	Glass shade	1

Installation

1 Installing the universal crossbar

WARNING: Turn off power at the main fuse box.

- ☐ Install the universal crossbar (EE) to the junction box (not included) with the supplied outlet box screws (BB).

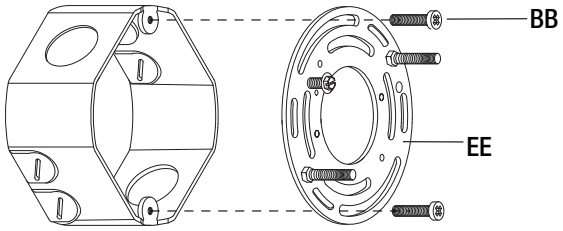

2 Making the electrical connections

NOTE: Always use the wire nuts (AA) to connect wires and push all excess wires and connections back into the junction box (not included).

- ☐ Wrap the ground wire from the fixture around the ground screw (CC) on the universal crossbar (EE), and then connect the ground wire from the fixture to the ground wire from the junction box.
- ☐ Connect the black wire of the power supply to the black wire of the fixture and connect the white wire of the power supply to the white wire of the fixture.

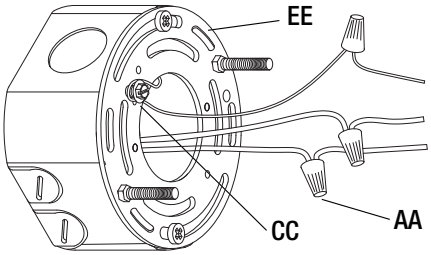

- ☐ Connect the fixture wire as follows:

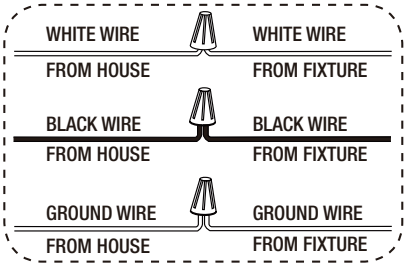

3 Installing the fixture body

WARNING: Installed as an uplight only.

- □ Attach the fixture body (A) to the universal crossbar (EE) and tighten with the ball nut (DD).

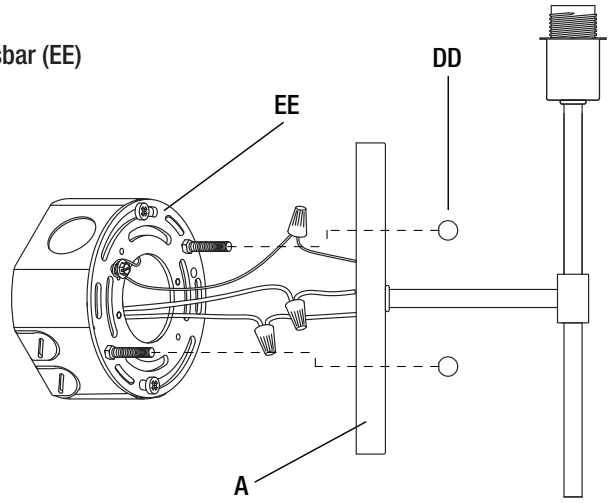

4 Installing the glass shade and the bulb

- □ Install the glass shade (B) to the socket of the fixture body (A) tighten with the socket ring (FF).
- □ Install a 60W MAX B10 bulb (not included) to the socket of the fixture body (A).

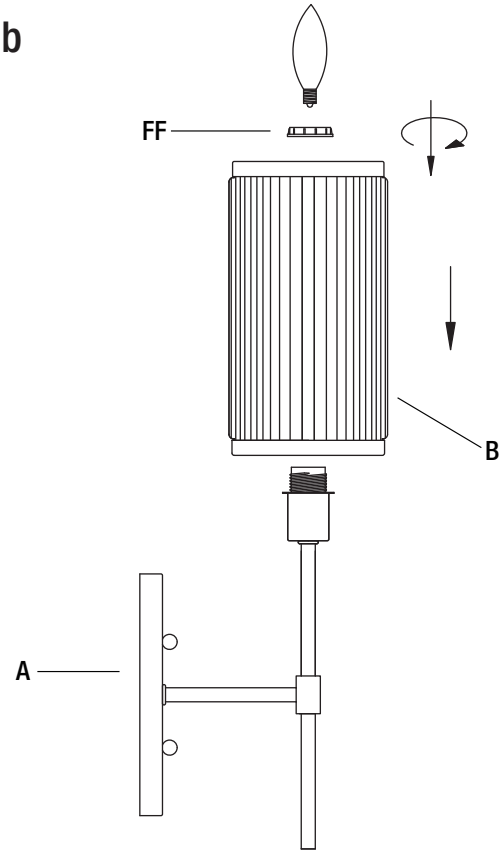

Care and Cleaning

- □ Clean the light fixture carefully with a soft, dry cloth. Do not use any cleaners with chemicals, solvents, or harsh abrasives.

Troubleshooting

Problem	Possible Cause	Solution
The product will not light.	The bulb is burned out.	□ Replace the light bulb.
	The power is off.	□ Ensure that the power supply is turned on.
	The circuit breaker is off.	□ Ensure that the circuit breaker is set to the ON position.
The fuse blows or the circuit breaker trips when the light is turned on.	There are too many items on one circuit.	□ Unplug the other items on the circuit. □ Contact a qualified electrician or call the Customer Service Team.

GLUCKSTEINELEMENTS

Questions, problems, missing parts? Before returning to the store,
call Gluckstein Elements Customer Service
8 a.m. - 7 p.m., EST, Monday-Friday, 9 a.m. - 6 p.m., EST, Saturday

HOMEDEPOT.CA

GLUCKSTEINELEMENTS.COM

Retain this manual for future use.