LED Step Light

ER3005
INSTALLATION SHEET

START FROM HERE

- Make sure power is completely off at the fuse box.
- Have your fixture installed by a qualified licensed electrician
- Prepare everything in a clear area.
- Wear gloves at all times during this installation.
- Read instructions carefully before you start assembly.
- Keep this instruction sheet for future reference.

Technical Support: 1-855-855-8926

Please Note:

- All Kuzco LED fixture comes with pre-wired LED module(s).
- Unless instructed to do so, please do not touch any part of the LED module(s) as any unnecessary contact with the module could cause permanent damage.
- For dimming, an ELV (Electronic Low Voltage) type of dimmer is required.

1. Remove the fixture from its original packaging. Remove the mounting plate **(1c)** from within the fixture **(1f)** by removing the two screws **(1g).** Secure mounting plate **(1c)** to the electrical junction box **(1a)**, using the two screws **(1d)** provided in the hardware package.

NOTE: This fixture is to be used with a 1 Gang junction box suited for intended application with minimum inside dimensions of 3.5”H x 2”W and minimum depth of 2 3/4”. A deeper junction box may be needed depending on hardware and type/amount of wires being used.

2. Attach all wiring with the provided marrets **(1b)** (white to white “N”, black to black “L”, ground to ground “G”). Align the gasket **(1e)** provided before securing the canopy **(1f)** to the mounting plate **(1c)**. Align the fixture to the mounting plate **(1c)** and secure using the two screws **(1f)** provided.

3. To prevent moisture from entering the outlet box and causing a short, seal around the top and side perimeter between the fixture and the wall surface with weather resistant caulking (see illustration 1). The space at bottom should be left un-caulked to prevent moisture build-up.

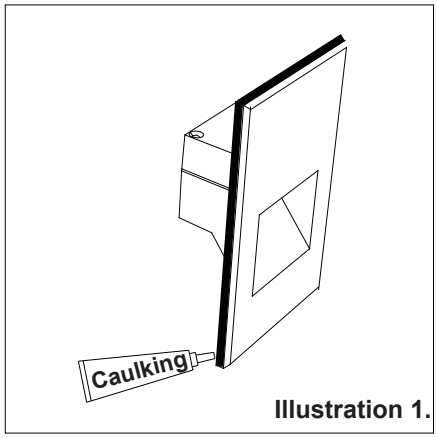

Illustration 1.

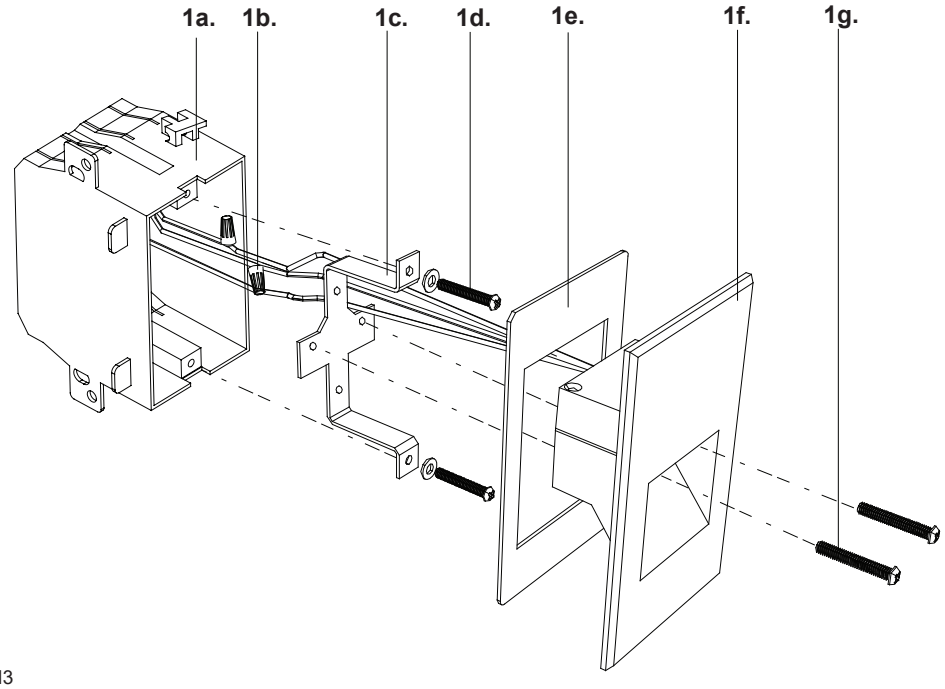

KUZCO
19054 28th Avenue Surrey, BC Canada V3Z 6M3
T: 604 538 7162 TF: 1-855 85 KUZCO F: 604 538 7196
W: kuzcolighting.com
20200706