Strive® | K-33153

20" undermount single-bowl bar sink

Features

- 24" (610 mm) minimum base cabinet width
- Rectangular basin with a contemporary design
- Single bowl
- Rounded 3/8" (10 mm) corners are easy to clean
- 8-1/8" (206 mm) depth
- No faucet hole drilling
- Rear drain increases workspace in the sink and allows for more storage space underneath the sink
- Box includes: Sink, sink rack, installation hardware, cutout template
- SilentShield® sound-absorption technology offers quieter performance
- Sink strainer sold separately



Sustainability

Available Colors/Finishes

Color tiles intended for reference only.

NA Stainless Steel

1-800-4KOHLER (1-800-456-4537)
Kohler Co. reserves the right to make revisions without notice to product specifications.
For the most current specification sheet, go to www.kohler.com USA or www.kohler.ca Canada.
4-22-2026 12:1 - US-CA

Codes/Standards

ADA compliant when installed to the specific requirements of these regulations.

ADA

ASME A112.19.3/CSA B45.4
ADA
ICC/ANSI A117.1

Technical Information

All product dimensions are nominal.

Drain Hole Diameter:	3-3/4" (94 mm)
Minimum Base Cabinet Width:	24" (610 mm)
Basin Configuration:	Single Bowl
Basin Length:	18-1/4" (464 mm)
Basin Width:	16-9/16" (420 mm)
Basin Depth:	8-1/8" (206 mm)

Material

- Premium 16-gauge stainless steel
- KOHLER stainless steel sinks resist corrosion and tarnishing

Recommended Products/Accessories

K-8801 Sink drain and strainer with tailpiece

K-23729 Stainless steel cleaner

K-35491 Marble serving tray

Warranty

See website for detailed warranty information.

KOHLER® Stainless Steel Sinks Lifetime Limited Warranty

1-800-4KOHLER (1-800-456-4537)
Kohler Co. reserves the right to make revisions without notice to product specifications.
For the most current specification sheet, go to www.kohler.com USA or www.kohler.ca Canada.
4-22-2026 12:1 - US-CA

THE BOLD LOOK OF KOHLER.

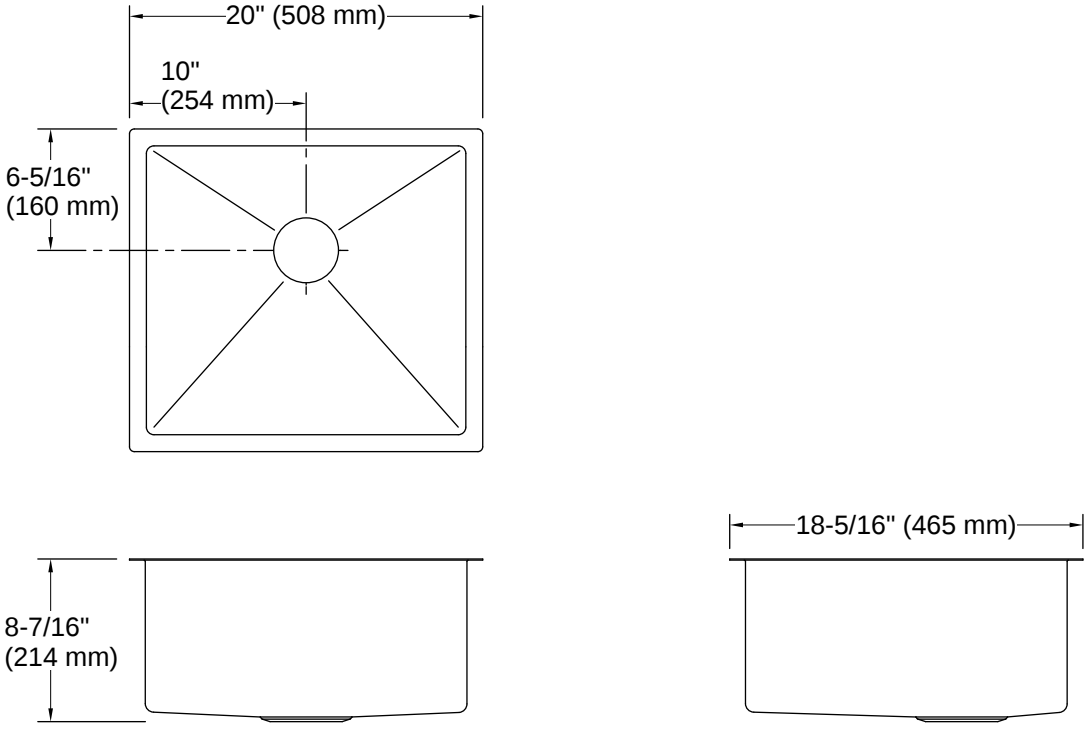

Installation

- Undermount
- Installation hardware included

Installation Notes

Install this product according to the installation instructions.

NOTICE: Countertop manufacturer or cutter must use the cut-out template provided with the product, or a current one provided by Kohler Co. (call 1- 800-4KOHLER). Kohler Co. is not responsible for cutout errors when the incorrect cut-out template is used.
ADA compliant when installed to the specific requirements of these regulations.

1-800-4KOHLER (1-800-456-4537)
Kohler Co. reserves the right to make revisions without notice to product specifications.
For the most current specification sheet, go to www.kohler.com USA or www.kohler.ca Canada.
4-22-2026 12:1 - US-CA

THE BOLD LOOK OF KOHLER.