DELTA COMMERCIAL

TECK®

T13H Series - MultiChoice® Universal Pressure Balance Tub and Shower System

T13H152-20

Description

This polished chrome-plated fixture features a pressure balance cartridge that ensures a stable water flow and temperature. The temperature is controlled solely through the handle, which can be adjusted to limit rotation into the hot water zone. The cartridge also includes integral checks to prevent the mixing of hot and cold water. Rated for a minimum flow rate of 1.2 gpm @ 45 psi (4.5 L/min @ 310 kPa), this fixture comes with a non-removable blue/red visual cover indicator to indicate the handle positions for cold, mixing, and hot water. The ADA-compliant metal lever handle measures 3.375” (86 mm) in length. It includes a shower #5 featuring a slide hand shower and a shower diverter valve. The hand shower is mounted on a standard 24” (610mm) stainless steel grab bar with slide, providing flexibility in positioning. An optional 69” (175.3 cm) long CP stainless steel hose is provided, which can stretch to 92” (233.7 cm). The maximum flow rate for the hand shower is 1.5 gpm @ 80 psi (5.7 L/min @ 552 kPa), while the minimum flow rate is 1.13 gpm @ 45 psi (4.3 L/min @ 310 kPa). The hand shower also includes backflow protection provided by two integral check valves.

Specifications

- Finish: Polished chrome plated
- Cartridge: Pressure Balance
- Temperature Control: Handle only
- Field Adjustable: Yes, to limit handle rotation into hot water zone
- Crossflow Prevention: Integral checks in cartridge prevent crossflow between Hot and Cold water inlets
- Cartridge Minimum Flow Rating: 1.2 gpm @ 45 psi (4.5 L/min @ 310 kPa)
- Handle Position Indicator: Non-removable Blue/Red visual cover indicator for Cold, Mixing, and Hot handle positions
- Grab Bar: Standard 24” (610 mm) stainless steel with adjustable slide
- Hand Shower back flow protection provided by two integral certified check valves in series, which operate independently
- Handle #2: Metal Lever Handle, ADA-compliant, measuring 3.375” (86 mm) in length
- Optional Hose: Chrome-plated stainless steel, 69” (175.3 cm) length (relaxed), extends to 92” (233.7 cm)
- Shower #5: Hand shower
- Shower #5 - Flow Rate Max. - 1.5 gpm @ 80 psi (5.7 L/min @ 552 kPa)
- Shower #5 - Flow Rate Min. - 1.13 gpm @ 45 psi (4.3 L/min @ 310 kPa)

Complies With

- ASME A112.18.1 / CSA B125.1
- Handshower is compliant to ICC / ANSI A117.1
- Pressure Balance and Diverter lever handles are compliant to ICC / ANSI A117.1
- EPA WaterSense® listed
- Pressure Balance Valve ASSE 1016
- Hand Shower backflow protection provided by two integral certified check valves in series, which operate independently

WaterSense Meets EPA Criteria
Certified by CSA Group
Hand Shower
Douchette

Lever Handle Only
Poignée à levier seulement

(Contact Delta Representative for State and/or Local Approvals)

Operation

- Plumbing Codes require that showerheads and handshowers provide a small but continuous flow of water (trickle) when in “PAUSE” mode. Because of this continuous flow, in certain circumstances pressure variations in the water line and/or changes in the position of the shower temperature control handle while in “PAUSE” mode could result in dramatic changes to the temperature of the water when the shower head or hand shower is returned to the “ON” position
- ALWAYS point the shower head away from yourself when returning to the “ON” position and feel the water with your hand before resuming your shower to ensure the water flow is not too hot or too cold
- DO NOT allow children or others who might not understand this warning to use the “PAUSE” function

Required Accessories

- Rough-in **- R10000-UNWS** - ordered separately

WaterSense® is a registered trademark of the U.S. Environmental Protection Agency.

Max. flow rates are at 80 psi (552 kPa), Min. flow rates @ 45 psi (310 kPa)

Delta Faucet Company reserves the right (1) to make changes in specifications and materials, and (2) to change or discontinue models, both without notice or obligation. Check with local codes for requirements in your area.

Masco Canada Limited
350 South Edgeware Rd, St Thomas, Ontario, Canada N5P 4L1
1-800-387-8277

This specification sheet was produced on December 19, 2023.

DELTA COMMERCIAL

TECK®

T13H Series - MultiChoice® Universal Pressure Balance Tub and Shower System

T13H152-20

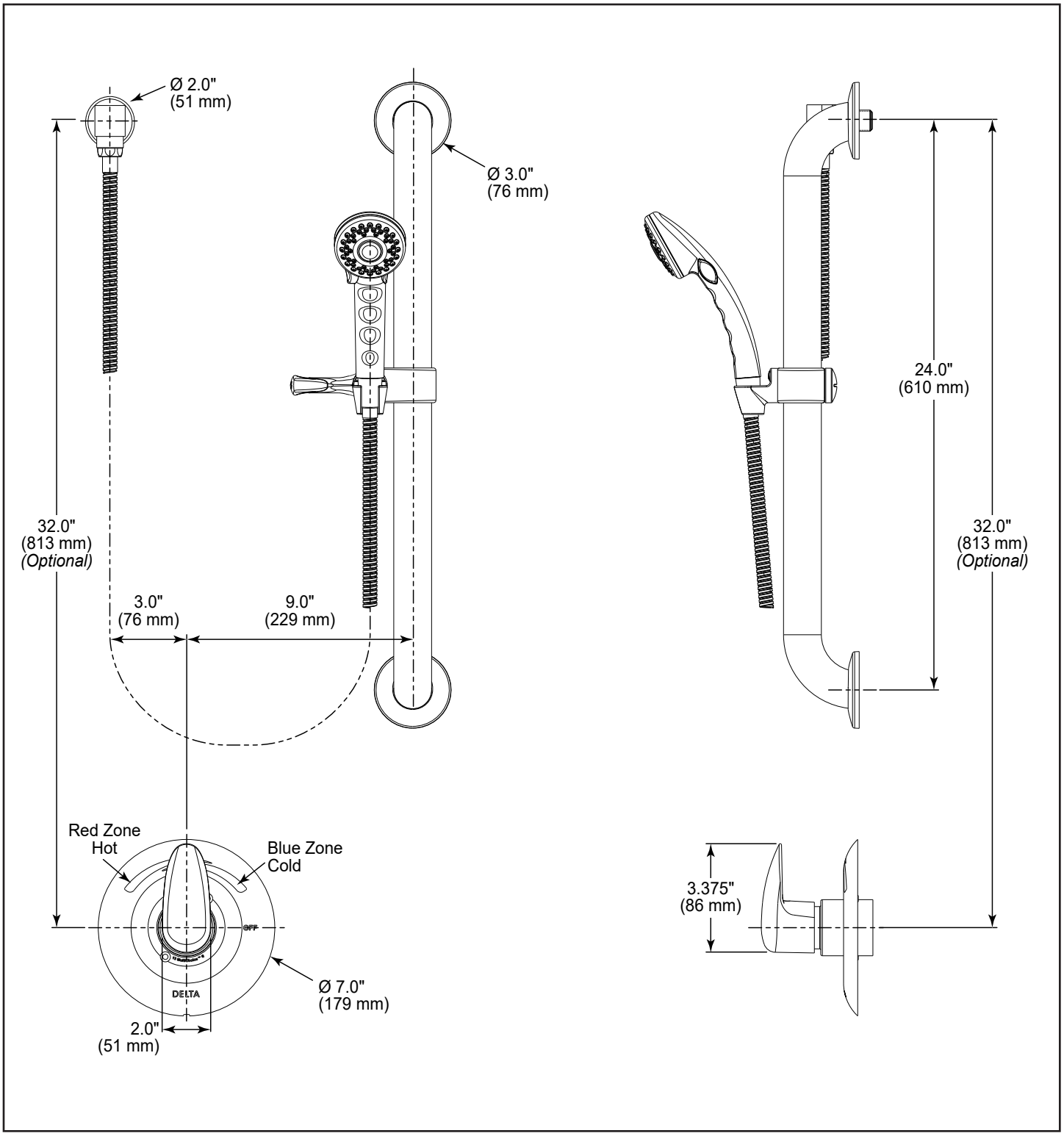

NOTICE
- Dimensions are for reference **ONLY.**
- Measurements may vary ± 0.25" (6 mm).

WaterSense® is a registered trademark of the U.S. Environmental Protection Agency.

Max. flow rates are at 80 psi (552 kPa), Min. flow rates @ 45 psi (310 kPa)

Delta Faucet Company reserves the right (1) to make changes in specifications and materials, and (2) to change or discontinue models, both without notice or obligation. Check with local codes for requirements in your area.

Masco Canada Limited
350 South Edgeware Rd, St Thomas, Ontario, Canada N5P 4L1
1-800-387-8277

T13H152-20

This specification sheet was produced on December 19, 2023.