FORIOUS

INSTALLATION INSTRUCTIONS

Included In the Package:

1. Bathroom Faucet
2. Rubber Gasket
3. White Gasket
4. Fastener
5. Hot and Cold Water Supply Hoses
6. Metal Pop Up Drain
7. Deck Plate (Vessel sink bathroom faucets do not contain deck plates)

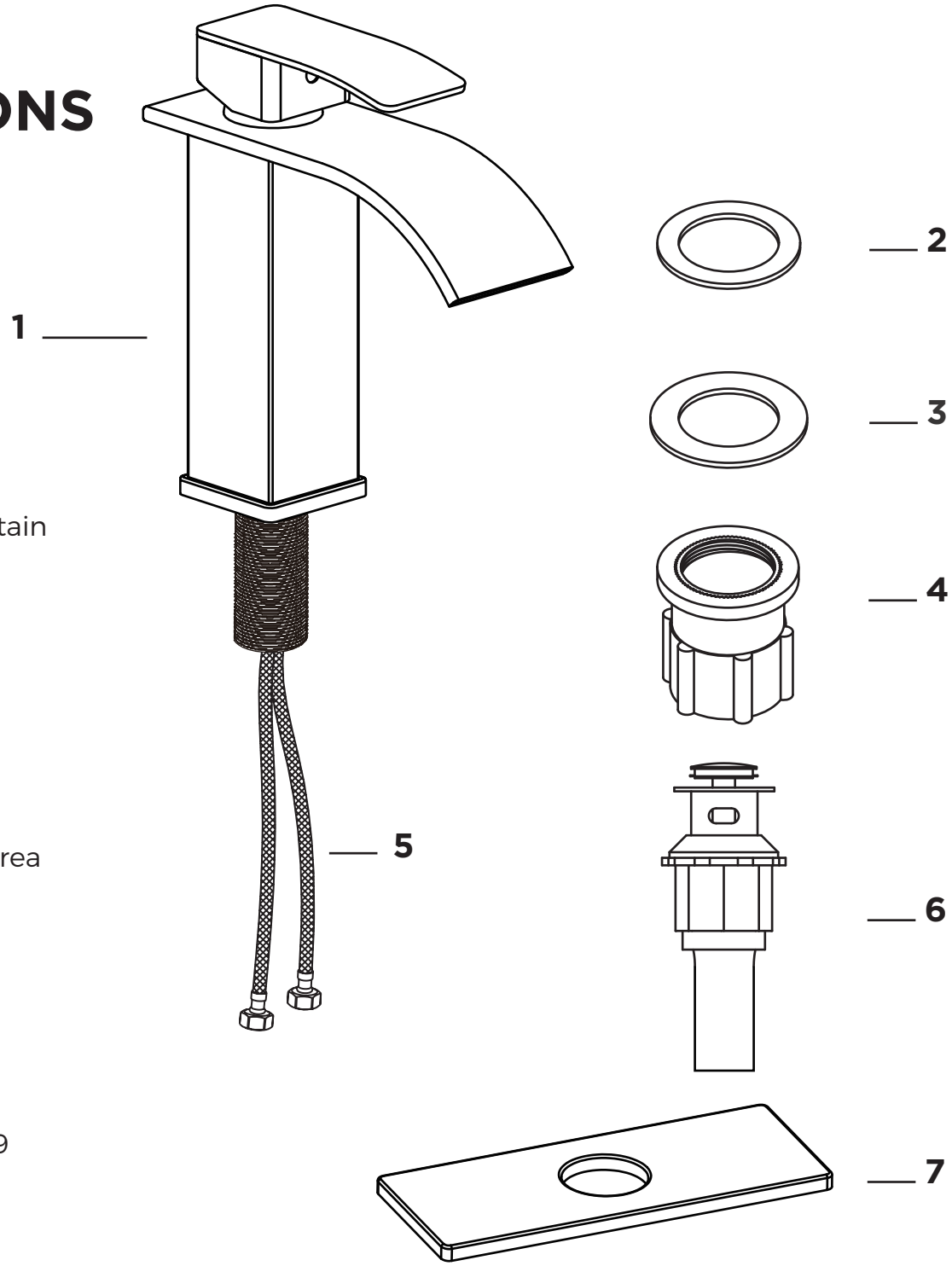

Before Installation:

- Turn off the water supply valves. Clean the mounting area of the sink.
- Recommended width of mounting area is between 15cm-31cm (6”-12”) measured between centers of outside mount holes.
- Diameter of mount holes must be 35mm (1.38”).
- Max countertop thickness is 35mm (1.38”)
- Water pressure Min 0.05MPa (7 psi) / Max 0.75MPa (109 psi)
- Water temp Min ≥ 20˚C (68˚F) / Max ≤ 85˚C (185˚F)

Installation Steps:

1. Run the deck plate through the water inlet hose and place it at the bottom of the faucet body.

Note:
- **The deck plate installation is optional.**
- **Vessel Sink Bathroom Faucets does not need to install the deck plate.**

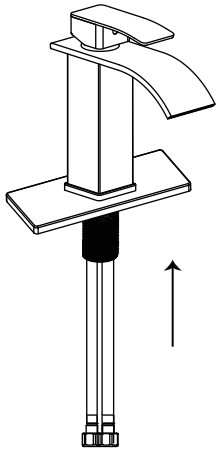

2. Pass the water inlet hose of the faucet through the sink hole and place the faucet standing on the sink.

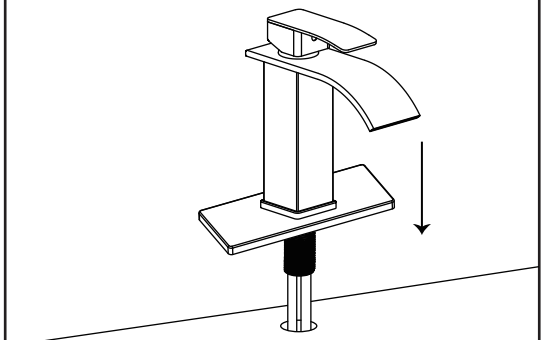

3. Put on rubber gasket and White Gasket.

4. Put on the fastener and tighten.

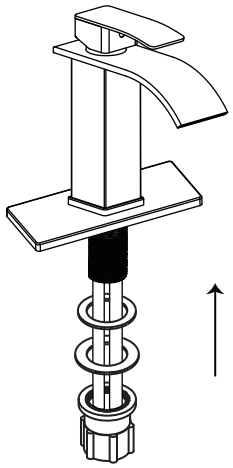

8. Install the pop-up sink drain stopper.

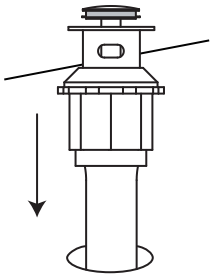

6. Notice: Open the water valve at this time, to drain out the sewage in the water pipe for 15 seconds and then close it.

7. Screw the water inlet hose nut onto the water valve and tighten it with a wrench. Finally, open the water valve and enjoy your waterfall.

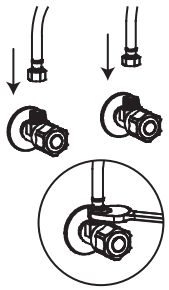

Maintenance:

- Always operate the faucet gently to ensure years of use.
- To maintain the finish, always blot dry any water on the faucet surface. Clean with a damp non-abrasive sponge and wipe dry with a clean soft cloth.
- Although the finish is very durable, certain cleaners can damage it. DO NOT use detergent powder, polishing powder, a nylon brush, or anything that may scratch the finish.
- DO NOT use acidic cleaners on the faucet.
- If air temperature falls below freezing (0˚C / 32˚F), run the faucet to prevent freezing.
- Shut off water supply valve when not in use for long periods.
- We reserve the right to make revisions to product design without notice.