Choreograph® | K-97624

Hook

Features

- Anodized aluminum is durable and easy to clean
- Can install over tile and other wall surfaces, inside or outside the shower space



Available Colors/Finishes

Color tiles intended for reference only.

- SHP Bright Polished Silver
- BL Matte Black
- 2MB Vibrant Brushed Moderne Brass
- BNK Anodized Brushed Nickel
- ABZ Anodized Dark Bronze

1-800-4KOHLER (1-800-456-4537)
Kohler Co. reserves the right to make revisions without notice to product specifications.
For the most current specification sheet, go to www.kohler.com USA or www.kohler.ca Canada.
4-15-2026 3:0 - US-CA

Codes/Standards

None Applicable

Recommended Products/Accessories

K-23723 Faucet cleaner

K-97622 14" floating shower shelf

K-97623 21" floating shower shelf

Warranty

See website for detailed warranty information.

KOHLER® Choreograph® Walls and Accessories Ten-Year Limited Warranty

1-800-4KOHLER (1-800-456-4537)
Kohler Co. reserves the right to make revisions without notice to product specifications.
For the most current specification sheet, go to www.kohler.com USA or www.kohler.ca Canada.
4-15-2026 3:0 - US-CA

THE BOLD LOOK OF KOHLER.

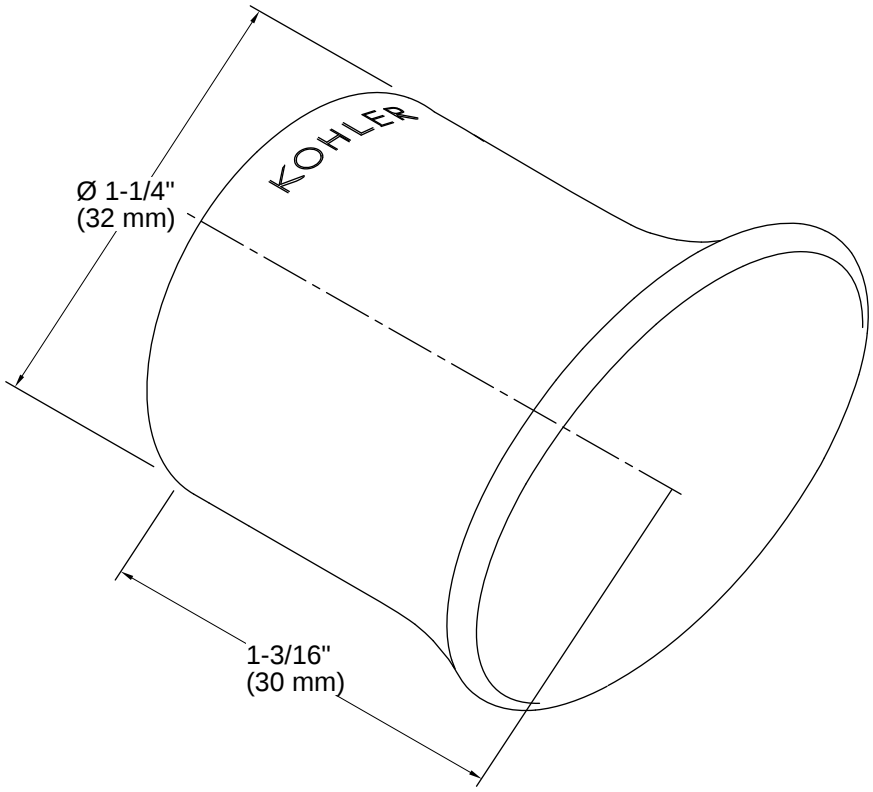

Installation

- Mounting hardware included

Installation Notes

Install this product according to the installation instructions.

Requires 2x4 backing to be installed.

1-800-4KOHLER (1-800-456-4537)
Kohler Co. reserves the right to make revisions without notice to product specifications.
For the most current specification sheet, go to www.kohler.com USA or www.kohler.ca Canada.
4-15-2026 3:0 - US-CA

THE BOLD LOOK OF KOHLER