Replacement Parts List

Oswell 4 in. Centerset 2-Handle High-Arc Bathroom Faucet in Chrome

MODEL	SKU #	FINISH
HD67083W-6001	1005203013	Chrome

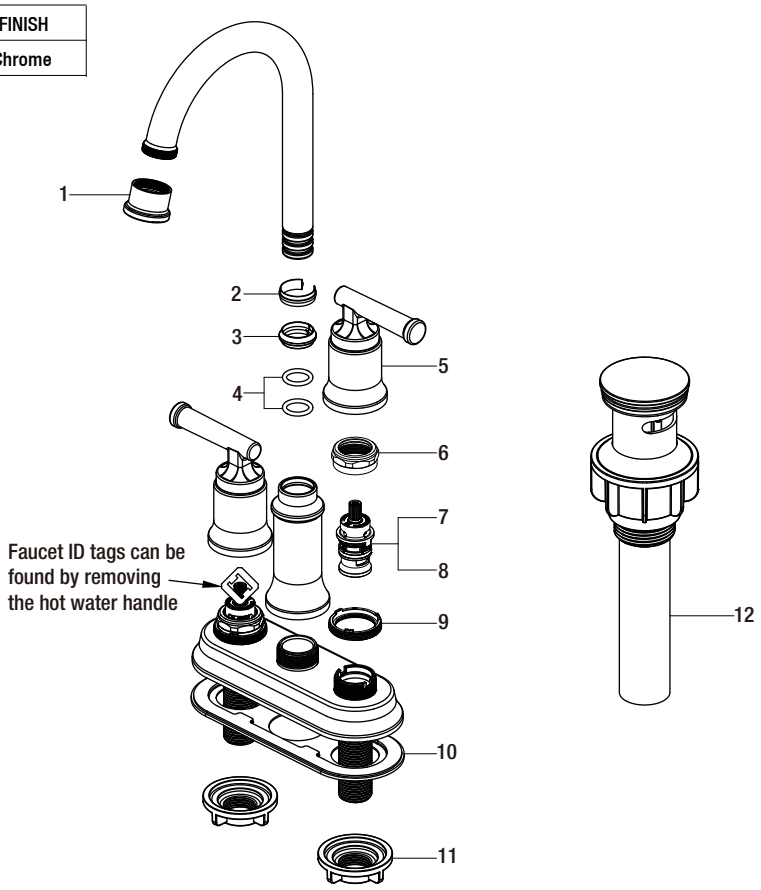

Many replacement parts can be purchased online or at your local store. Please use the table below to identify the part SKU number needed, go to HOMEDEPOT.COM, and check for online and store availability. If you can't find the part you are looking for, please call 1-855-HD-GLACIER.

Part	Description	Part #	Internet SKU #	Store SKU #
1	Aerator	RP1371101		
2	Wearable Ring	RP70077		
3	Clip	RP70023		
4	O-Ring	RP60008		
5	Handle Assembly	RP1371001		
6	Bonnet Nut	RP70723		
7	Cartridge H	RP20079		

Part	Description	Part #	Internet SKU #	Store SKU #
8	Cartridge C	RP20080		
9	Connector	RP70724		
10	Gasket	RP80729		
11	Mounting Nut	RP56001	203193994	579276
12	Press Pop-Up Assembly	RP4026901		