Project		Catalog #		Type	
Prepared by		Notes		Date	

HALO

QuickLink | LT6-DM Triac

Halo QuickLink Low Voltage Lighting Kit
Canless Installation

Typical Applications

- Residential

Interactive Menu

- Order Information page 2
- Product Specifications page 2
- Photometric Data page 4
- Product Warranty

Product Certification

Refer to ENERGY STAR® Certified Products List.
Can be used to comply with California Title 24 High Efficacy requirements.
Certified to California Appliance Efficiency Database under JA8.

Product Features

Top Product Features

- Single driver powers multiple LED fixtures connected by low voltage cable
- Selectable CCT: 2700K, 3000K, 3500K, 4000K, 5000K
- Direct mount – does not require recessed housing or junction box
- 120V input, dimmable down to 10% with select phase cut dimmers
- Perfect for new construction or remodel work
- Power supply and LED units are IC rated

QuickLink
Low Voltage Kit

1 POWER SUPPLY & 4 FIXTURES 35ft.

SAVE UP TO 85% WIRING TIME

Order Information

SAMPLE ORDER NUMBER: **(1) LTQL6069S1EDM-4PK, (2) LTQL6069S1EDM**
Purchase kit and additional fixtures separately.

Low Voltage Lighting Kit

Kit includes (1) 72W low voltage remote driver, 35ft of low voltage CM cable, (4) LTQL6 fixtures

Model	Lumens	CRI/CCT	Driver	Installation	Kit Size
LTQL6 = 6-inch LT QuickLink Low Voltage Lightingv	**06** = 600 lumens (nominal)	**9S =** 90 CRI min, 5-color selectable CCT	**1E =** 120V, phase cut 10% dimming	**DM =** Direct mount canless installation	**-4PK =** 4 pack kit including driver
Notes	**Notes**	**Notes**	**Notes**	**Notes**	**Notes**

Additional Fixtures[1]

Driver NOT included. Connect additional fixtures to Low Voltage Lighting Kit.

Model	Lumens	CRI/CCT	Driver	Installation
LTQL6 = 6-inch LT QuickLink Low Voltage Lightingv	**06** = 600 lumens (nominal)	**9S =** 90 CRI min, 5-color selectable CCT	**1E =** 120V, phase cut 10% dimming	**DM =** Direct mount canless installation
Notes	**Notes**	**Notes**	**Notes**	**Notes**

(1) Maximum 8 fixtures per driver.

Accessories
Mounting Frames[2] **HL6RSMF** = 6" round and square mounting frame
Notes
(2) Due to its size, the QuickLink Remote Driver must mount to the building structure, not a mounting frame.

Fixture Count		
Model	**Watts per Downlight**	**Max Downlights**
LT-DM 6" Triac	8.1 W	8

Product Specifications

Modules

- Module construction includes LED Array, heat sink, reflector, lens, splay and trim ring.
- Regressed splay
- Heat sink designed to conduct heat away from the LED Array

Gaskets

- Closed cell gasket achieves restrictive airflow requirements without additional caulking

LED Array

- Plurality of mid power LED's provides a uniform source with high efficiency and long life
- 90 color rendering index (CRI) minimum; R9 greater than 50 provides high color rendering
- Field selectable color temperature, select 2700K, 3000K, 3500K, 4000K or 5000K CCT; color accuracy within 4 SDCM
- Meets ENERGY STAR® color angular uniformity requirements

Optical Assembly

- Regressed lens
- Impact-resistant polycarbonate
- Convex form and lamp-like appearance
- Diffuse for even illumination

Junction Box

- Pre-galvanized steel driver/junction box with captive hinged junction box cover
- Hinged junction box for easier installation into ceiling plenum
- Three 1⁄2" conduit pry-outs
- Two Slide-N-Side™ non-metallic (NM) wire traps allows wiring outside the box
- Accepts NM cable types: 14-2, 14-3, 12-2, 12-3 (U.S.) and 14-2, 14-3, 12-2 (Canadian)
- Three 4-port push wire nuts with clear caps for quick and reliable mains voltage connections
- Integral mounting holes facilitate direct mounting to building structure

Driver

- 72W 120V, providing noise free operation
- Continuous flicker-free dimming down to 10% with select phase cut dimmers
- Plenum rated inline electrical quick connect provides low voltage connection to fixture fitting

Installation

- Can be installed in 1/2" to 1-1/4" thick ceilings
- Heat treated springs hold fixture fitting securely in the ceiling
- Halo QuickLink Quick Connectors allow for quick installation of additional fixtures

Compliance

- UL Certified for US and Canada
- NOTE: Not for use in direct contact with spray foam insulation, reference NEMA LSD57-2013
- Wet location listed and IP44 ingress protection
- Air-tite per ASTM-E283-04
- Suitable for use in clothes closets when installed in accordance with the NEC 410.16 spacing requirements
- EMI/RFI emissions per FCC 47CFR Part 15 consumer limits
- Contains no mercury or lead and RoHS compliant
- Photometric testing in accordance with IES LM-79-08
- Lumen maintenance projections in accordance with IES LM-80-08 and TM-21-11
- Compliant with California Title 24 High Efficiency LED under JA8, reference Modernized Appliance Efficiency Database System (MAEDBS) for 2019 JA8 High Efficacy Lighting
- ENERGY STAR® certified (reference "Certified Light Fixtures" database)

Warranty

- Five year limited warranty, consult website for details. www.cooperlighting.com/legal

Dimensional and Mounting Details

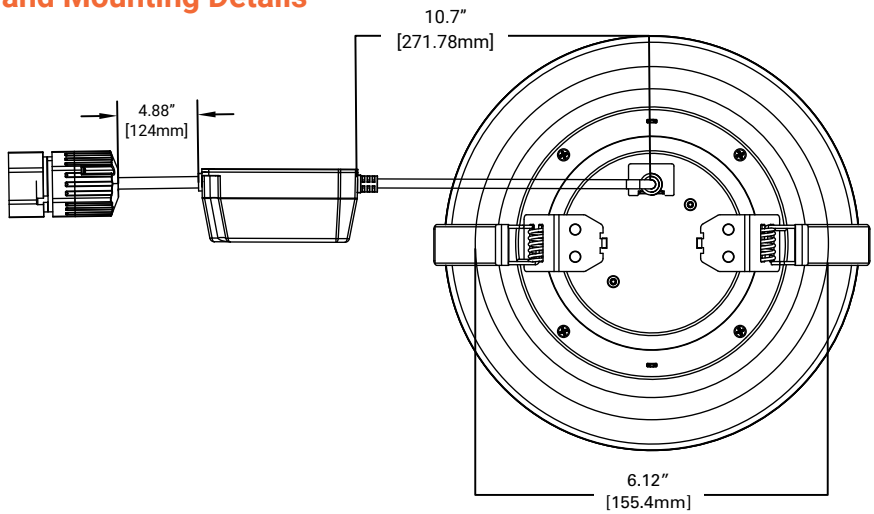

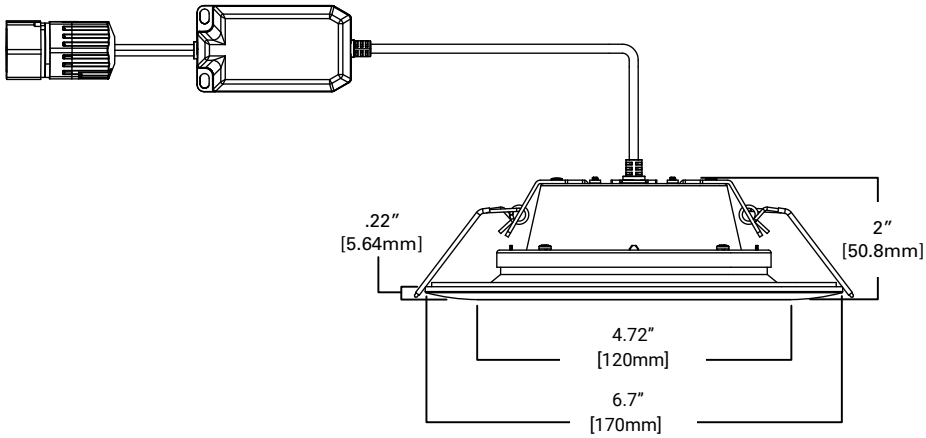

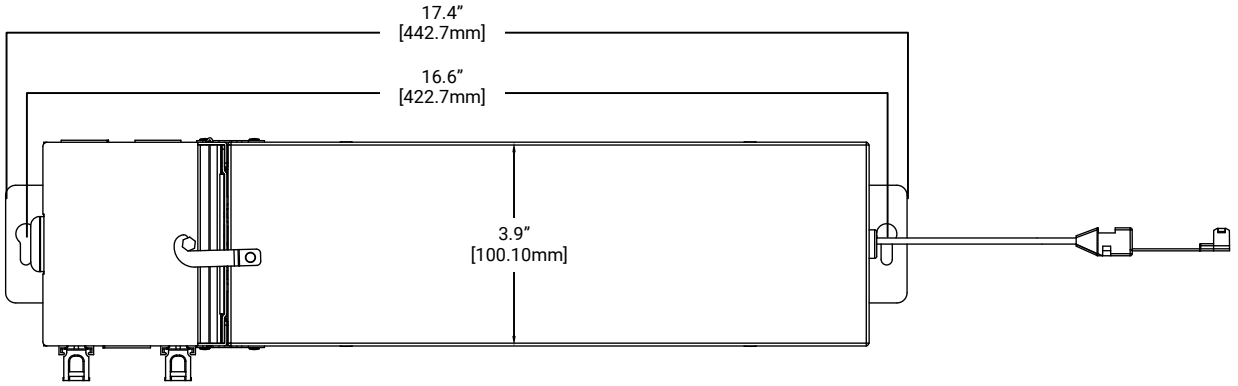

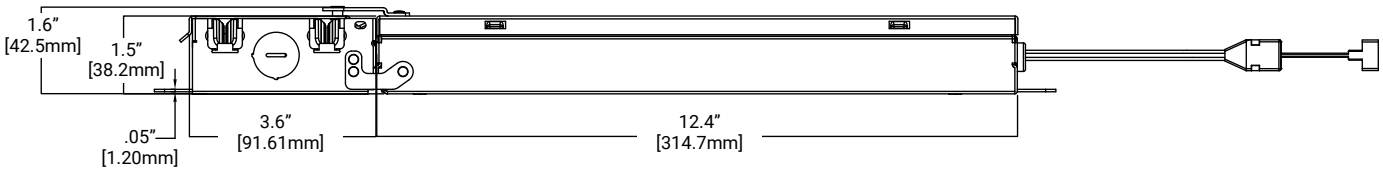

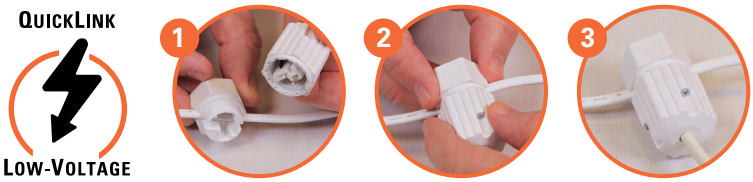

Photometric Data

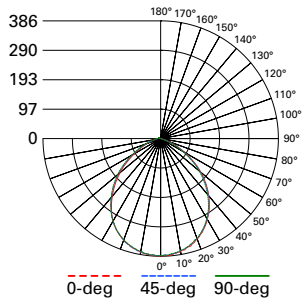

LTQL6069S1EDM-3000K-UNIT

Spacing criterion: (0-180) 1.00
(90-270) 1.22
(Diagonal) 1.28

Beam Angle: 95°
Field Angle: 139.2°
Lumens: 825
Input Watts: 8.1 W
Efficacy: 101.9 LPW
Test Report:
LTQL6069S1EDM-3000K-UNIT.ies

Zonal Lumen	Lumens	% Lumens
0-30	292	35.4
0-40	466	56.5
0-60	747	90.5
0-90	825	100

TM-30-15	Rf = 94
	Rg = 101
CRI/CIE	Ra = 94
	R9 = 70

CCT - Range of 2700K- 5000K

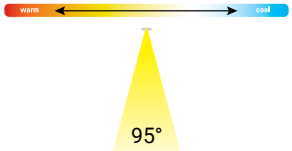

Note: Lumen output may decrease based on distance from power supply and quantity of LED heads used.

Energy Data - 4 Pack Kit

Lumens	3300 lm @ 3000K
Input Voltage	120V
Input Current	0.34 (A)
Input Power	40 (W)
Efficiency	84.6 (LPW)
Inrush (A)	16 A @ 700 µS
THD	≤ 20%
PF:	≥ 0.9
T Ambient	-30 - +40°C
Sound Rating	≤ 22 dba

LTQL4069S1EDM - Individual Fixture					
	CCT	Watts	Lumens	LPW	CRI
Individual Downlight 800LM	2700K	8.1	780	96.3	93
	3000K	8.1	825	101.9	94
	3500K	8.2	865	105.5	94
	4000K	8.2	895	109.1	94
	5000K	8.1	925	114.2	93

LTQL4069S1EDM-4PK - System					
	CCT	Watts	Lumens	LPW	CRI
4PK-System Downlight 3200LM	2700K	39.2	3120	79.6	93
	3000K	39.0	3300	84.6	94
	3500K	39.1	3460	88.5	94
	4000K	39.2	3580	98.2	94
	5000K	39.3	3700	94.1	93

Product Specifications

LTQL4069S1EDM

PRODUCT SPECIFICATIONS

Lumens	825
Watts	8.1
Lumens Per Watt (Efficacy)	101.9
Color Accuracy (CRI)	94
Light Color (CCT)	3000K

Correlated Color Temperature (CCT)

Cooper Lighting Solutions
1121 Highway 74 South
Peachtree City, GA 30269
P: 770-486-4800
www.cooperlighting.com

© 2022 Cooper Lighting Solutions
All Rights Reserved.

Specifications and dimensions subject to change without notice.