Assembly & Installation Instructions

Read instructions carefully and turn electricity off at main circuit breaker panel before beginning installation.

****

Warning: If any special control devices are used with this fixture, follow the instructions carefully to assure full compliance with N.E.C. requirements. If there are any questions, contact a qualified electric contractor.

Warning: California Residents Proposition 65 This product contains lead, a chemical known to the state of California to cause cancer and birth defects or other reproductive harm. Do not place the product in your mouth. Wash your hands after handling this product.

Caution: Electrician installation highly recommended. All glass is fragile, use care when handling glass component(s) and or lamp(s). Read instructions carefully and turn electricity off at the main circuit breaker panel before beginning installation.

Advertencia: Si usa alguien dispositivo especial de control can este aparato de luz, siga las instrucciones cuidadosamente para asegurar la completa conformidad con los requisitos N.E.C. Si existe alguna duda, contacte un electricista calificado.

Precaución: Instalación de electricista altamente recomendada. El vidrio es frágil: Tenga cuidado al manipular el (los) elemento(s) de vidrio y/o la(s) bombilla (s). Lea atentamente las instrucciones y encienda la electricidad en el panel del interruptor principal antes de comenzar la instalación.

****

Important Notice: This is a generic instruction sheet used for various fixtures. Fixture shape and style may vary. Glass, Shade, Diffuser shape and style may vary.

Aviso Importante: Esta es una hoja de instrucciones genérica utilizada para varios accesorios. La forma y el estilo del accesorio pueden variar. El vidrio, la sombra, la forma del difusor y el estilo pueden variar.

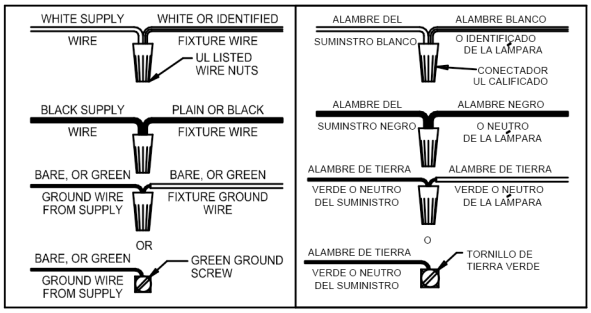

Assembly Steps

1. C. D ——→ A
2. E. F ——→ B
3. H. G ——→ C
4. I. J ——→ K

Part included		
QTY	Part Description	Code
0	Junction box	A
3	wires nuts	B
1	Mounting bracket	C
2	Studs	D
0	Leading wires	E
2	Wires	F
1	Canopy	G
2	Screws	H
3	Shades	I
3	Shades	J
3	Cups	K

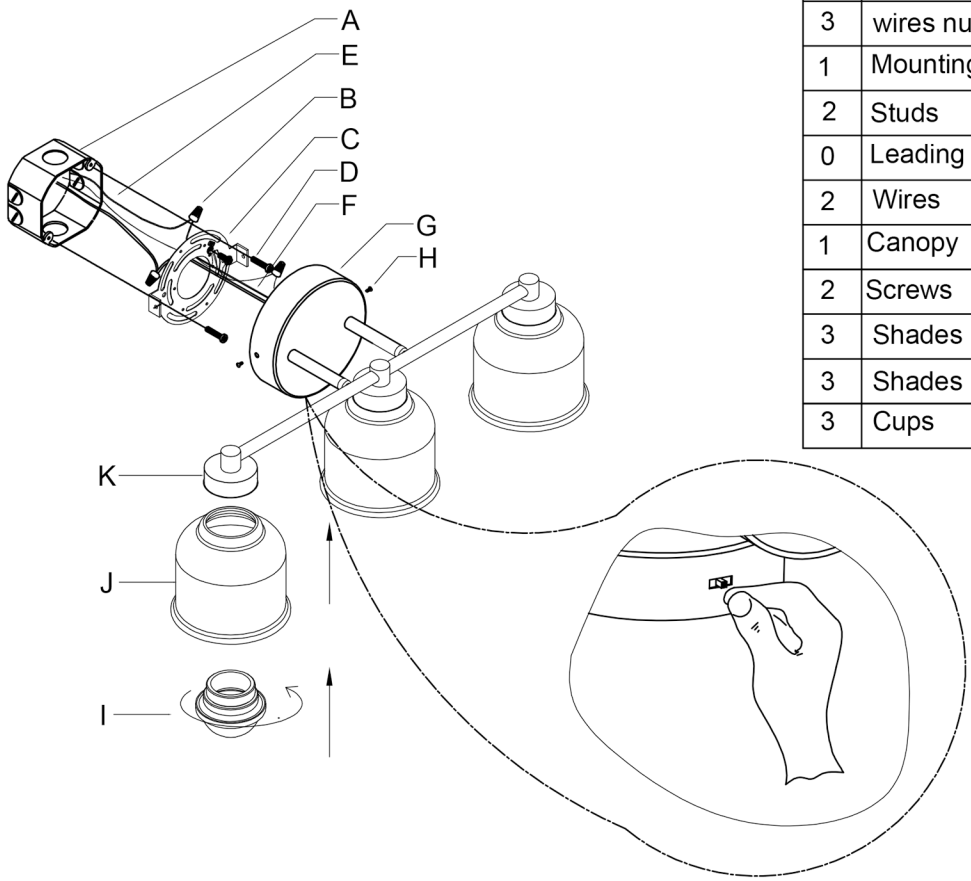

Remarks:

5 COLOURS CHANGING PRESETS:3000K-3500K-4000K-5000K-6500K. 1 level is 3000K, 2 level is 3500K, 3 levelis 4000K, 4 level is 5000K, 5 level is 6500K.

HWH INVESTMENT

If there is any problems or questions just feel free to contact us before return, 100% satisfied customer service will be provided to solve during Monday to Friday.

Lifetime Customer Service

E-mail Us: hwhinvestment_service@outlook.com

FB Messenger: @HWH Lighting