PRODUCT SPECIFICATIONS

6 in LED Infinitiedge

Commercial Electric™

92097
SKU# 1009415547

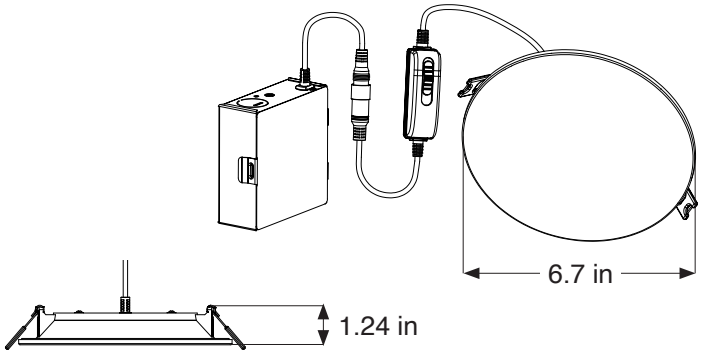

ADVANTAGES

- 80 Watt Equivalent
- 50,000 Hours of Continuous Use
- 5 Year Warranty
- Slim design allows for installing on almost any shallow ceiling application
- Dimming to 10% Without Buzzing or Flickering
- IC Rated for Direct Contact with Insulation
- 90 CRI Provides High Color Quality
- Adjust Color of Light with Integrated Switch

Warm White (2700K)
Soft White (3000K)
Neutral White (3500K)
Bright White (4000K)
Daylight (5000K)

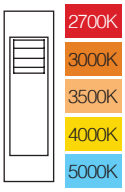

SPECIFICATIONS

Model Number	92097
SKU	1009 415 547
OMSID	324324035
Power	12 W
AC Voltage, Frequency	120V, 60 Hz
Color Temp (nom.)	2700K / 3000K / 3500K 4000K / 5000K
Operation Temp	-20°C ~ -40°C
CRI	90
Lumen Output (min.)	800 lm
Dimming	YES
Lifetime Rating	L70/50000Hrs
Efficacy	66.67 lm/watt

PACKAGING

Weight (±0.5 lb)	0.87 lbs
Size (L x W x H) (±0.1 in)	6.69 in x 6.69 in x 1.25 in
Box Dimensions	6.77 in x 3.62 in x 7.16 in
Gross Weight	1.17 lbs
UPC	058219920978

NO HOUSING REQUIRED

T24
Can be used to comply with California Title 24 High Efficacy requirements

ENERGY STAR

DIMMER LIST

LUTRON		
CTCL-153PDH-IV	DVCL-153P-WH	SLV-600P-WH
CTCL-153PDH-WH	DV-600PR-WH	LGCL-153PLH-WH
DVWCL-153PH-WH	DV-600-PR-BL	DVW-603PGH-WH
MSCL-OP153M-WH	TG-600PR-WH	DVLV-600PH
TG-600PR-LA	S-600P-WH	DV-103P-WH
TGCL-153PH-WH	TG-603PGH-WH	MRF2-6ND-120WH
S-600P-WH	S2-LH	MALVD-600-WH
AY-600P-LA	DVELV-300P-WH	PD-10NXD-WH

COOPER
DAL06P-C2

LEVITON
6674
S2-LH
6683
6672

INCLUDED IN BOX

- LED Downlight (1)
- Remote Junction Box (1)
- Hole Template (1)

Contact Information 1-877-527-0313 · WWW.HOMEDEPOT.COM