Commercial Electric™

1008367367
1008369606
1008369616

USE AND CARE GUIDE

LED WALLPACK

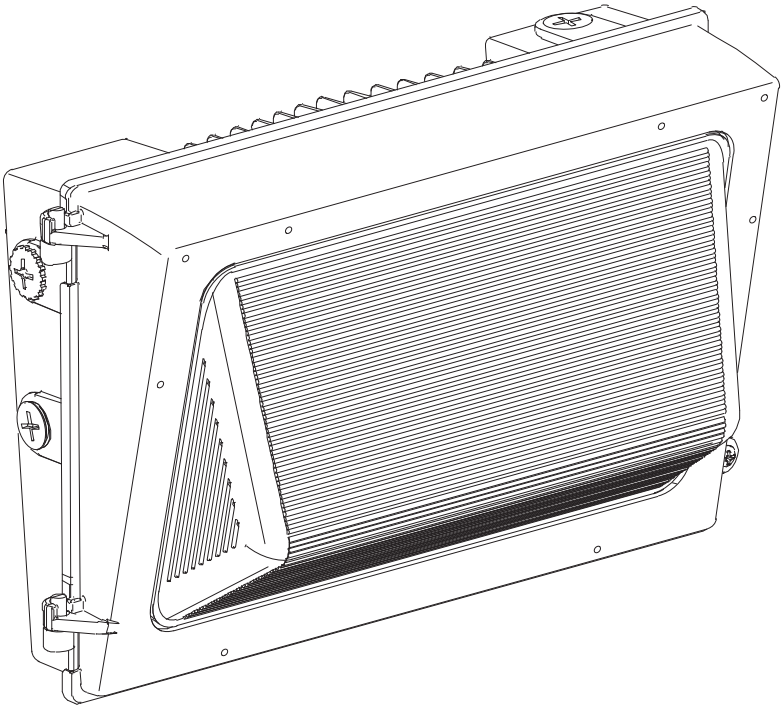

Questions, problems, missing parts? Before returning to the store,
call Commercial Electric Customer Service
8 a.m. - 7 p.m., EST, Monday - Friday, 9 a.m. - 6 p.m., EST, Saturday

1-877-527-0313

HOMEDEPOT.COM

THANK YOU

We appreciate the trust and confidence you have placed in Commercial Electric through the purchase of this LED Wallpack. We strive to continually create quality products designed to enhance your home. Visit us online to see our full line of products available for your home improvement needs. Thank you for choosing Commercial Electric!

Table of Contents

Safety Information 2
Warranty 2
Pre-Installation 3
Installation 5
Operation. 9
Care and Cleaning 10
Troubleshooting 10

Safety Information

IMPORTANT

This product must be installed in accordance with the applicable national electrical code and local building codes by a person familiar with the construction and operation of the product and the hazards involved.

PRECAUTIONS

- □ Please read and understand this entire manual before attempting to assemble, install, or operate this light fixture.
- □ This light fixture requires a 120-277 volt AC power source.
- □ Some codes require installation by a qualified electrician.
- □ This light fixture must be properly grounded.
- □ Make sure connections are secure using wire nuts, crimp-on lugs or other UL approved connecting devices.
- □ This light fixture should be installed outdoors to a wall.
- □ This product may contain chemicals known to be hazardous. Thoroughly wash hands after installing, handling, cleaning or otherwise touching the product.

NOTICE: For dimming, connect to 0–10V dimming switch.

NOTICE: FCC Regulations state that any unauthorized changes or modifications to this equipment not expressly approved by the manufacturer could void the user's authorization to operate this equipment.

WARNING: Before installation or servicing, turn the power off at the circuit breaker or fuse. Place tape over the circuit breaker switch and verify power is off at the light fixture.

WARNING: Risk of fire. Keep the lamp heads at least 3 in. (76 mm) from combustible materials.

CAUTION: Burn hazard. Allow the light fixture to cool before touching.

IMPORTANT: The device is tested and found to comply with Part 15 of the FCC Rules. Operation is subject to two conditions: (1) This device may not cause harmful interference and, (2) this device must accept any interference received, including any interference that may cause undesired operation.

This equipment has been tested and found to comply with the limits for a Class A digital device, pursuant to part 15 of the FCC rules. These limits are designed to provide reasonable protection against harmful interference when the equipment is operated in a commercial environment. The equipment generates, uses, and can radiate radio frequency energy and, if not installed and used in accordance with the instruction manual, may cause harmful interference to radio communications. Operation of the equipment in a residential area is likely to cause harmful interference in which case the user will be required to correct the interference at his own expense.

Warranty

This is a limited warranty offered by the manufacturer for a period of five years from the date of purchase to its customers. The manufacturer warrants to customers that the products will be free from defects in material and workmanship. The obligation of the manufacturer under this warranty is limited to the provision of replacement of products and is extended to the original purchaser of the product on presenting valid purchase receipt or other proof of date of original purchase acceptable to the manufacturer. The receipt is required for rendering the warranty performance. Any warranty claims without original proof of purchase would not be accepted.

It should be noted that the warranty does not apply to the manufacturer products that have been altered or repaired by unauthorized personnel, have been subjected to neglect, abuse, misuse or accident or damages caused during shipping. Any other products not manufactured by the manufacturer which have been supplied, installed and/or used in conjunction with the manufacturer products are not covered under this warranty. Any damages caused by replacements bulbs, LEDs or corrosion or discoloration of brass components are also not covered by this warranty.

Warranty (continued)

LIMITATION OF LIABILITY

In no event shall the manufacturer be liable for indirect, consequential, incidental or special damages, or lost profits. The manufacturer is not liable for any claims or damage arising out of or connected with the manufacture, sale, delivery, use, maintenance and repair or modification of the manufacturer products, or supply of any replacement parts that exceed the purchase price of the manufacturer products giving rise to a claim. Labor charges to remove or install the fixtures will not be accepted.

TO CLAIM

Please contact The Home Depot customer service at 1-877-527-0313 or email support@homedepot.com and include your name, address and contact number, along with a copy of the purchase receipt and a brief description of the problem.

Pre-Installation

PLANNING INSTALLATION

Before installing the light fixture, ensure that all parts are present. Compare parts with the Hardware Included and Package Contents sections. If any part is missing or damaged, do not attempt to assemble, install, or operate this light fixture.

Estimated installation time: 20 minutes

- ☐ The fixture can be mounted in the following two ways:
  - ☐ **Junction Box Mount:** Use a junction box to mount the fixture.
  - ☐ **Surface Conduit Mount:** The fixture can also be mounted directly on the wall surface using conduit entry.
- ☐ To ensure proper dusk-to-dawn operation, ensure the photocell is oriented at the top for a wall mount installation, in an area that receives daylight. Do not place too close to reflective surfaces.
- ☐ When installing two fixtures on one switch, make sure the switch is rated for at least a 1A inductive load.
- ☐ If dimming, use with 0-10V dimming switch.

NOTE: The mounting base (D) mounts to recessed mounted standard junction boxes or to the surface directly. Junction box must be at least 1-1/2 in. in depth for proper installation for a recessed mount application.

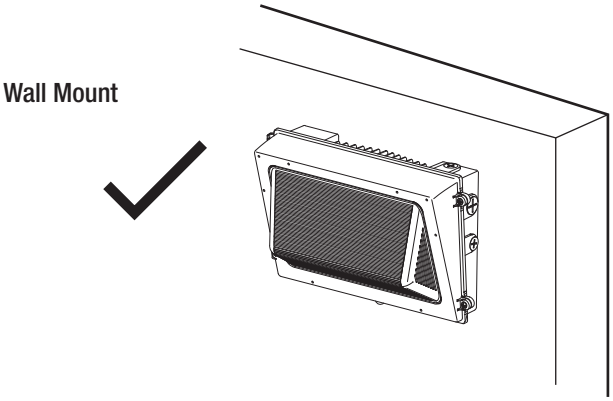

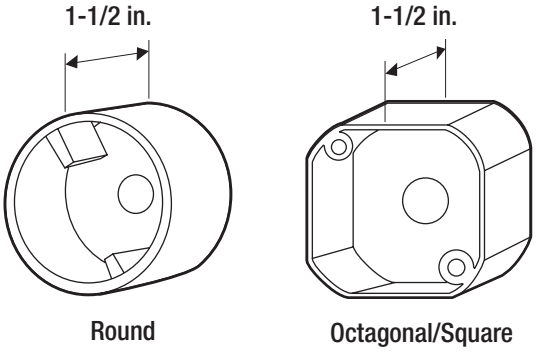

Pre-Installation (continued)

SPECIFICATIONS

Model	1008367367	1008369606	1008369616
Lumens (Light Output)	3600 Lumens	5300 | 6500 | 7500 Lumens	9800 | 10800 | 12000 Lumens
Watts (Power Consumption)	30 Watts LED	60-50-40 Watts LED	90-80-70 Watts LED
Replaces	100 Watt Metal Halide	250 Watt Metal Halide	400 Watt Metal Halide
Lumens/Watts (Efficacy)	125 Lumens per watt	130 Lumens per watt	
Power Requirements (Input Voltage)	120–277VAC		
Light Color (CCT)	4000K	3000K-4000K-5000K	
Dimmable	Dimming (0-10V dimming switch)		
Operating Modes	**Dusk-to-Dawn:** Automatically turns light fixture ON during night and OFF during day. **Switch-Controlled:** Flip switch to turn light fixture ON and OFF.		

TOOLS REQUIRED

Phillips screwdriver

Safety goggles

Silicone sealant

Wire strippers/ cutter

Circuit tester

Work gloves

Ladder

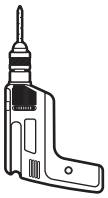
Power drill

HARDWARE INCLUDED

NOTE: Hardware not shown to actual size.

AA

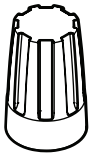
BB

Part	Description	Quantity
AA	#8-32 x 3/4 in. Phillips mounting bracket screw	4
BB	Wire nut	3

Pre-Installation (continued)

PACKAGE CONTENTS

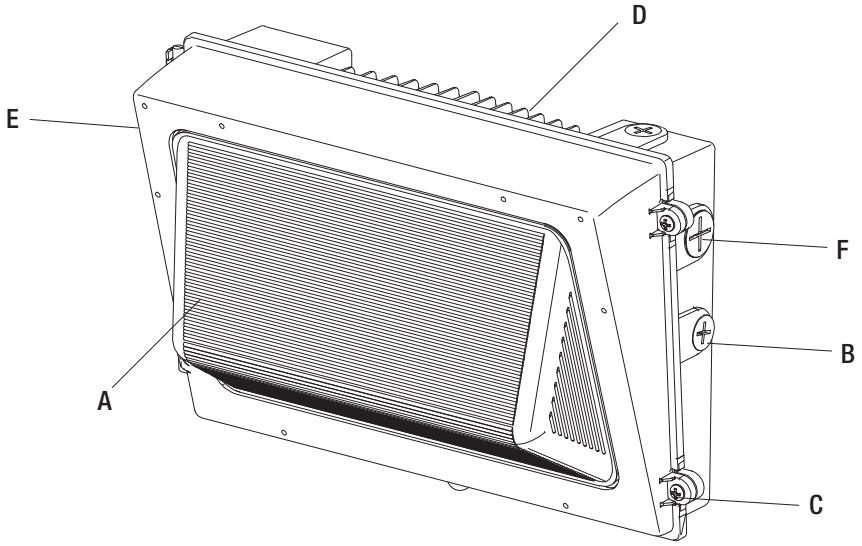

Part	Description	Quantity
A	Light fixture	1
B	Conduit entry plug	4
C	Mounting base screw (pre-installed)	2
D	Mounting base	1
E	Photocell	1
F	CCT / FAO switch	1

Installation

1 Turning off the electricity

- ☐ Verify the wall switch is in the OFF position.
- ☐ Turn OFF power at the circuit breaker that supplies power to the outlet box you are working on.
- ☐ For screw-in type fuses unscrew the fuse that supplies power to the outlet box you are working on.

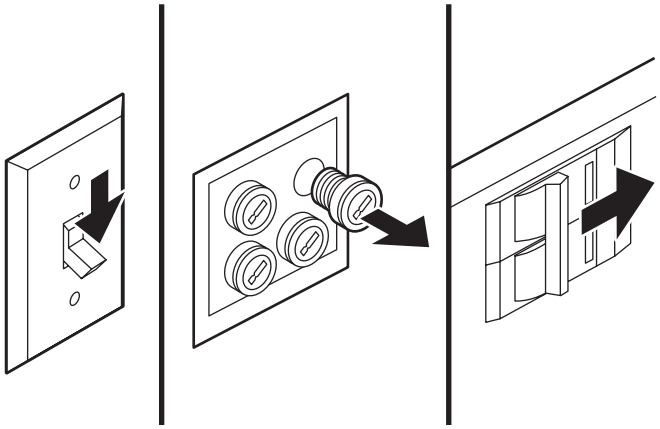

2 Removing the mounting base

NOTE: The mounting base screws (C) come pre-installed on the light fixture.

- Loosen the two mounting base screws (C) using a Phillips screwdriver to open the fixture. (Fig. 1)
- The fixture opens sideways from the mounting base (D) and stays connected on the hinge. (Fig. 2)

CAUTION: DO NOT touch the LED and photocell lens (E) inside the fixture. DO NOT damage or soil the reflector.

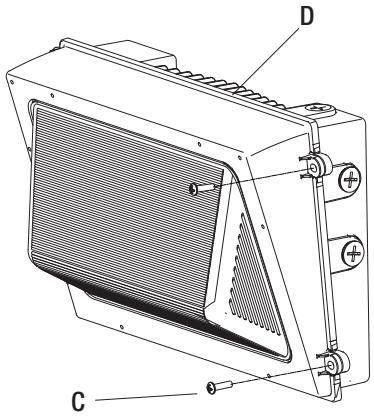

Fig. 1

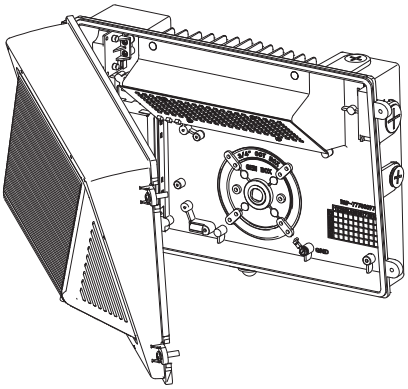

Fig. 2

3 Removing the knock outs on the mounting base

- For junction box mount: Measure the size of your junction box and refer to the guide in the figure to select the holes to knock out.
- For 3-1/4 in. junction box: Knock out two holes in the inner ring.
- For 4 in. junction box: Knock out two holes on the outer ring.
- For surface mount: Measure the distance between two holes, pre-drill holes into the mounting surface, and drill holes on the desired ring accordingly.
- Use a power drill to drill out the two holes.

NOTE: If necessary, you may drill out mounting holes through the back plate housing to correspond with the junction box or wall surface for level mounting.

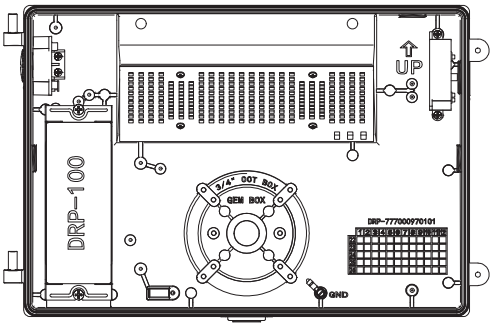

4 Installing the mounting base

Junction Box

- ☐ Route the junction box wires through the large center hole in the mounting base (D).
- ☐ Align the holes on the mounting base (D) with the holes on your junction box. Use two (2) or four (4) #8 screws (AA), depending on the size of the holes in your junction box, to attach the mounting base (D) to your junction box. (Fig. 1)

Surface Conduit Mount

- ☐ Mark and drill two to four holes on the wall surface as per the desired location for installing the mounting base (D).
- ☐ Use two or more suitable screws (not included) applicable to the surface of mounting and attach the mounting base (D) on the surface. (Fig. 2)

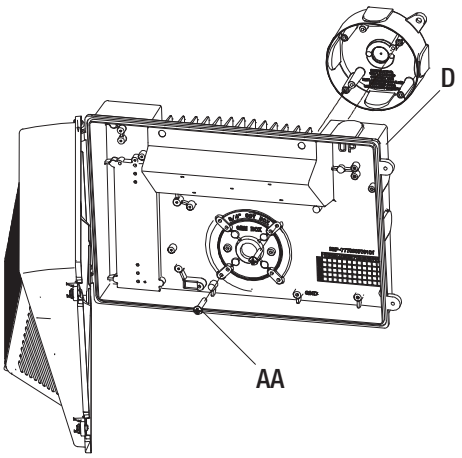

Fig. 1

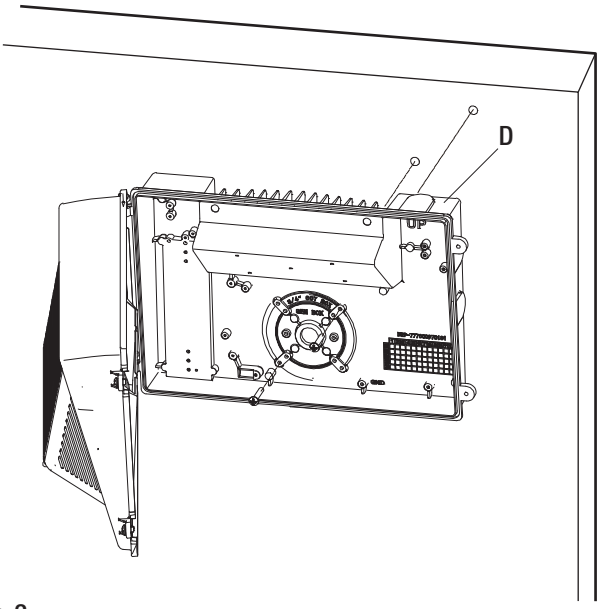

Fig. 2

5 Making the electrical connections

Junction Box

- ☐ Follow the wiring instructions given below to make the electrical connections. (Fig. 1).

Surface Conduit Mount

- ☐ Remove desired conduit plug (B) from one of the fixture's sides from the where conduit will enter. (Fig. 2)
- ☐ Make wiring connections inside the fixture as per the instructions given below.
- ☐ If necessary, strip 3/8 in. of insulation from junction box or fixture (A) wires (Fig. 1).

ON/OFF Wiring (Non Dimming) Method:

- ☐ Connect the fixture black wire to the supply black wire ((+) line), and fixture white wire to the supply white wire ((-) common) by twisting the exposed wires together and using the wire nuts (BB). Ensure there are no loose wires.
- ☐ Connect the supply ground wire to the green fixture ground wire by twisting the exposed wires together and using the wire nuts (BB).

0-10V Dimmable Wiring Method:

- ☐ Connect the fixture black wire to the supply black wire ((+) line), and fixture white wire to the supply white wire ((-) common) by twisting the exposed wires together and using the wire nuts (BB). Ensure there are no loose wires.
- ☐ Connect the supply ground wire to the green fixture ground wire by twisting the exposed wires together and using the wire nuts (BB).
- ☐ Connect the purple wire to the (V+) DIM wire and the pink wire with (V-) DIM wire by twisting the exposed wire together.

NOTE: Hold stripped ends near each other and align any frayed strands (do not twist wires).
Push the wires into wire nut (BB) and use your fingers to twist the wire nut clockwise until tight. Check for tightness by pulling wires.

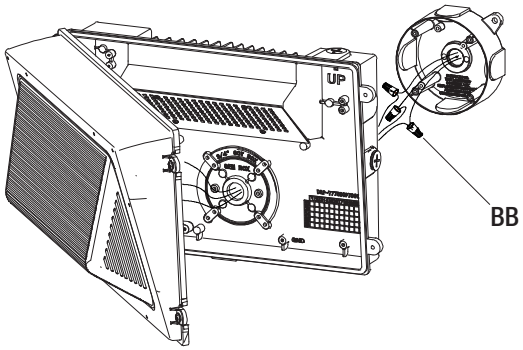

Fig. 1

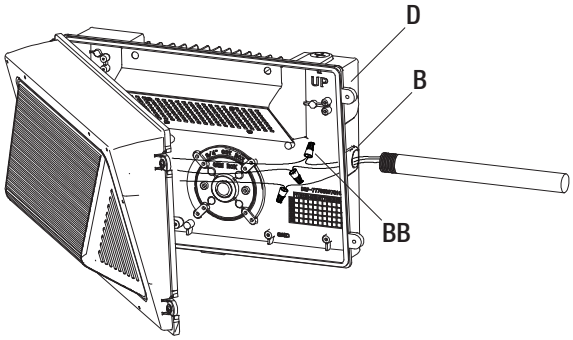

Fig. 2

Non-Dimming Wiring Diagram

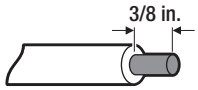

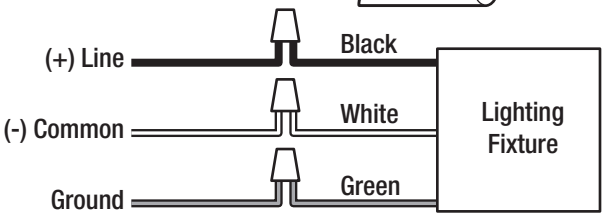

0–10V Dimming Wiring Diagram

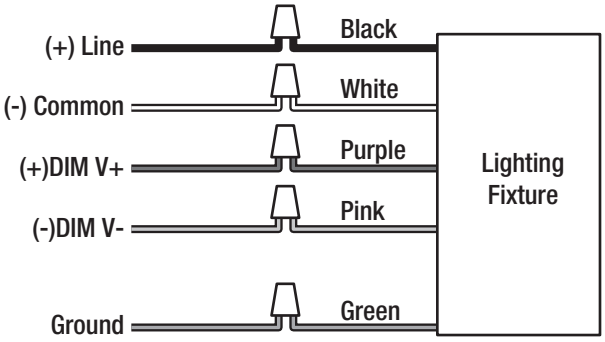

Installation (continued)

6 Mounting the light fixture and caulking

- ☐ Close the fixture by tightening the two mounting base screws (C), using a Phillips screwdriver.
- ☐ Caulk around the mounting base (D) and surface with silicone sealant (not included).

NOTICE: Failure to properly caulk around the surface and mounting base (D) could lead to water damage and is not covered under warranty.

NOTE: When attaching this fixture (A) to an external surface mount junction box, caulk the inside of the light fixture before attaching to the mounting base (D).

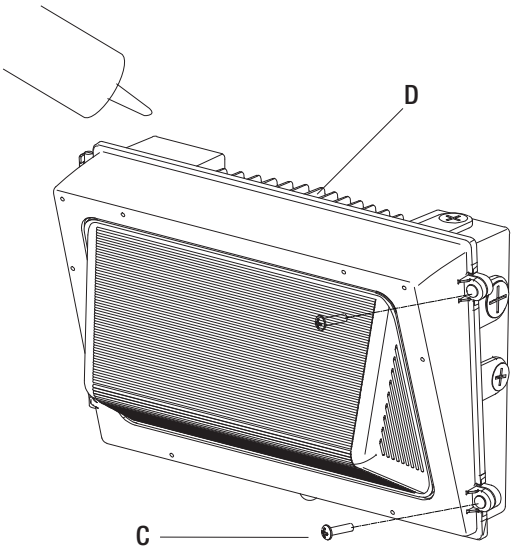

Operation

SELECTING DUSK-TO-DAWN AND PHOTO-CELL ON/OFF SWITCH

Option 1: Dusk-to-dawn operation

Dusk-to-dawn operation enables the light fixture to automatically turn ON when dark outside and turn OFF when the sun rises, thus saving you energy.

- ☐ Ensure the switch powering the outlet connected to the light fixture is turned to the ON position and leave it ON at all times to enable dusk-to-dawn functionality to operate automatically.

IMPORTANT: To test if the light fixture (A) and photocell (E) works properly run power to the fixture and cover the photocell to turn fixture ON. Shine a light into the photocell to see if fixture turns OFF.

NOTE: If photocell (E) is located in an area under heavy shade the photocell may not detect enough light and may turn the light fixture ON.

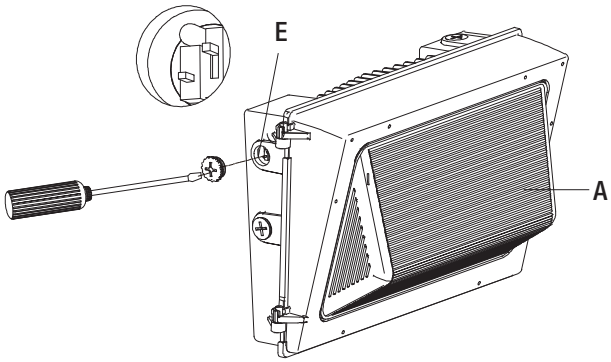

Option 2: Switch controlled

Switch controlled operation enables the light fixture to turn ON and OFF by flipping a switch that controls the electricity to the outlet powering the fixture. The light fixture will not turn ON and OFF automatically, but is manually controlled.

- ☐ Remove the photo-cell cap by selecting the DIP switch on/off. The photo-cell function can be set as required.

1008367367 1008369606 1008369616	PHOTO-CELL SETTING	ON OFF Note: ON is default setting

Selecting CCT and FAO

Remove the CCT and DIM cap and select the desired combination of Wattage (brightness) output and CCT (light color temperature) as desired.

CCT Setting	1008369606 1008369616	3000K 4000K 5000K Note: 4000K is default setting
FAO Setting	1008369606	40W 50W 60W Note: 60W is default setting
	1008369616	70W 80W 90W Note: 90W is default setting

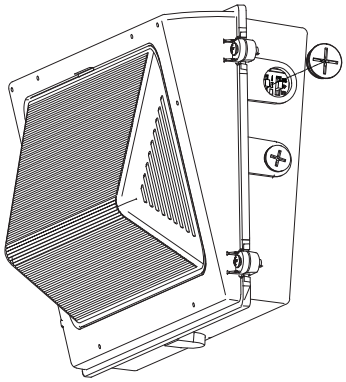

Care and Cleaning

- □ Shut off the main power supply before cleaning the product. To prolong the original appearance, clean the light fixture with clear water and a soft, damp cloth only.
- □ Do not use abrasive cleaners or cleaners that contain alcohol. Do not apply paints, solvents, or any other chemicals on this light fixture. They could cause a premature deterioration of the finish and may void the warranty.
- □ Do not spray the light fixture with a hose or power washer.

Troubleshooting

Problem	Possible Cause	Solution
The light does not turn ON.	There is no power to the fixture.	□ Check if circuit breaker is tripped. □ Confirm wall switch is ON. Verify wiring to the fixture is correct (turn power OFF to fixture beforehand).
	The fixture senses daylight.	Cover the photocell. Wait several seconds until the fixture turns ON.
The light cycles ON and OFF continuously.	The photocell light sensor is sensing reflected light.	□ Relocate the light fixture to a location where there is no reflected light. □ OR place the optional photocell cover over the photocell light sensor and use the wall switch to turn the light ON and OFF.
The light flickers.	The light fixture is wired through a dimmer switch.	Do not use a dimmer switch to control the light fixture. Replace the dimmer with a standard ON/OFF switch.
The light stays ON.	The light sensor is in a shaded area.	□ Shine a flashlight into the light sensor and wait up to a minute. If the light turns OFF, the fixture should be moved to a location with enough light in the daylight hours for the light sensor to work. □ OR place the optional black cover over the photocell light sensor and use the wall switch to turn the light ON and OFF.
	The light sensor is faulty.	If the light does not turn OFF when a flashlight is shined on the light sensor for a few minutes, then the sensor may be faulty. Please contact customer service.

NOTE: Photocell (E) has a short delay in order to reduce its sensitivity to sudden light changes. When testing, shine a light and cover the photocell for up to a minute to check if the fixture functions properly.

Commercial Electric™

Questions, problems, missing parts? Before returning to the store,
call Commercial Electric Customer Service
8 a.m. - 7 p.m., EST, Monday-Friday, 9 a.m. - 6 p.m., EST, Saturday

1-877-527-0313

HOMEDEPOT.COM

Retain this manual for future use.